

COMMON TRAINING

PHASE FOUR

INSTRUCTIONAL GUIDE

SECTION 3

EO M408.03 – COMMAND A SQUAD

Total Time:	30 min

PREPARATION

PRE-LESSON INSTRUCTIONS

Resources needed for the delivery of this lesson are listed in the lesson specification located in A-CR-CCP-604/PG-001, *Phase Four Qualification Standard and Plan*, Chapter 4. Specific uses for said resources are identified throughout the instructional guide within the TP for which they are required.

Review the lesson content and become familiar with the material prior to delivering the lesson.

Photocopy and fold in half (laminate if possible) the Parade Sequence Aide-Mémoire Card located at Attachment A for each cadet.

PRE-LESSON ASSIGNMENT

Nil.

APPROACH

A demonstration and performance was chosen for this lesson as it allows the instructor to explain and demonstrate the skill of commanding a squad while providing an opportunity for the cadet to practice the skill under supervision.

INTRODUCTION

REVIEW

The review for this lesson is from EO M408.02 (Identify Parade Sequence).

QUESTIONS:

Q1. What is the sequence for the opening parade?

Q2. What is the sequence for the closing parade?

Q3. What is the general sequence of the Annual Ceremonial Review (ACR) parade?

Unofficial convenience copy of A-CR-CCP-604/PF-001, cached 2026-11-08 from https://app.cadets.gc.ca/cadet-publications/A-CR-CCP-604-PF-001/A-CR-CCP-604-PF-001.pdf.
Verify against the official publication.

ANTICIPATED ANSWERS:

A1. The sequence for the opening parade is as follows:

- form up;
- roll call;
- inspection;
- march past;
- announcements; and
- dismissal.

A2. The sequence for the closing parade is as follows:

- form up;
- announcements;
- advance in review order; and
- dismissal.

A3. The general parade sequence for the ACR is as follows:

- form up;
- reception of the reviewing officer (RO);
- inspection by the RO;
- march past;
- awards and presentations;
- advance in review order;
- departure of the RO; and
- dismissal.

OBJECTIVES

By the end of this lesson the cadet shall have commanded a squad.

IMPORTANCE

It is important for cadets to command a squad on parade as they will be placed in a team leader role and will need to know the formations and locations of all members on the parade square. Cadets also need to know how to deliver words of command in a clear and concise manner, with confidence and determination, which will affect how cadets in the squad respond to orders.

Unofficial convenience copy of A-CR-CCP-604/PF-001, cached 2026-11-08 from https://app.cadets.gc.ca/cadet-publications/A-CR-CCP-604-PF-001/A-CR-CCP-604-PF-001.pdf.
Verify against the official publication.

Teaching point 1 **Explain, demonstrate and have the cadets command a squad.**

Time: 25 min Method: Demonstration and Performance



This TP is intended to demonstrate to the cadet how to command a squad. For this skill TP, it is recommended that instruction take the following format:

(1) Explain and demonstrate the complete skill of commanding a squad while cadets observe, to include:

a. falling in;

b. greeting the RO to complete the inspection;

c. leading the squad on the march past; and

d. falling out.

(2) Explain and demonstrate each step required to effectively command a squad while on parade.

(3) Have each cadet assume the role of team leader and practice each step.

(4) Have each cadet assume the role of team leader and practice the complete skill.

Divide the team into two or three groups, if required, for all cadets to command a squad.

This activity shall be conducted IAW A-PD-201-000/PT-000, *The Canadian Forces Manual of Drill and Ceremonial*.

Note: Assistant instructors may be required for demonstration purposes.



Position the cadets around the parade square, as required, so that they can see the movements required to command a squad.



Distribute a copy of the Parade Sequence Aide-Mémoire Card located at Attachment A to each cadet. Cadets may use the card when practicing the skill of commanding a squad.



The term squad is a generic name for a group of cadets, used to teach drill movements. This term can be interchanged with platoon, flight, division or any other applicable elemental or regimental term.

The aim of division drill is to enable the division, when it takes its place in the ship's company, to carry out any sequence of drill movements that the parade commander orders.

Unofficial convenience copy of A-CR-CCP-604/PF-001, cached 2026-11-08 from https://app.cadets.gc.ca/cadet-publications/A-CR-CCP-604-PF-001/A-CR-CCP-604-PF-001.pdf.
Verify against the official publication.



The parade format that is provided in this lesson is one way to conduct the parade. Cadet corps have some flexibility, as they may not have the number of cadets required or cadets may have not completed the required training to assume the role of every parade position.

Refer to Annex A of PO 108 (Participate in an Annual Ceremonial Review Parade), for further information on the parade format.

Falling In

When falling in as a divisional petty officer (DPO), follow the required commands of the parade commander.



If there is no deputy parade commander, the parade commander would complete the required commands and actions.

Unofficial convenience copy of A-CR-CCP-604/PF-001, cached 2026-11-08 from https://app.cadets.gc.ca/cadet-publications/A-CR-CCP-604-PF-001/A-CR-CCP-604-PF-001.pdf.
Verify against the official publication.

When assuming the role of a divisional officer (DivO), the following additional steps for falling in are to be conducted:

(1) The commencement of the promenade begins after the squads have fallen in. The promenade continues until the deputy parade commander or the parade commander is ready to assume command.

(2) DivOs position themselves five paces in the rear of and centred on the deputy parade commander, at the front of the parade square. Dressing is automatic and DivOs are to stand at ease in succession from the right.

(3) On the command OFFICERS FALL—IN, by the deputy parade commander, DivOs come to attention, turn left and march to their respective squads, approaching their squads from the right flank front (as illustrated in Figure 1).

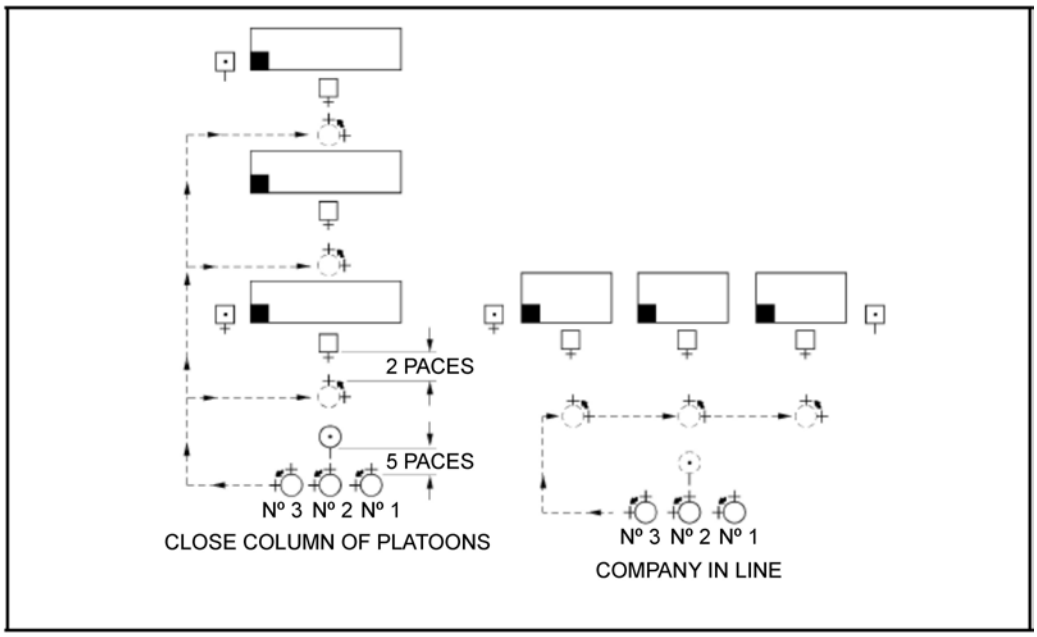

Note. From The Canadian Forces Manual of Drill and Ceremonial (p. 7-3-16), by Director History and Heritage 3-2, 2005, Ottawa, ON: Department of National Defence.

Figure 1 When Officers Fall In

DivOs halt two paces in front of the DPO, who reports the strength, condition, etc, of the squad. DivOs then march forward two paces to take their proper command position after the DPO has moved to their position behind the squad.



Figure 1 demonstrates the fall-in procedures when a DivO and a DPO are on parade. Inform the cadets that if no DivO is required to fall in, the DPO will maintain command of the division.

Regardless of frontage, when a squad is formed up in line the DivO / DPO shall be positioned three paces in front and centre of the squad.

Unofficial convenience copy of A-CR-CCP-604/PF-001, cached 2026-11-08 from https://app.cadets.gc.ca/cadet-publications/A-CR-CCP-604-PF-001/A-CR-CCP-604-PF-001.pdf.
Verify against the official publication.

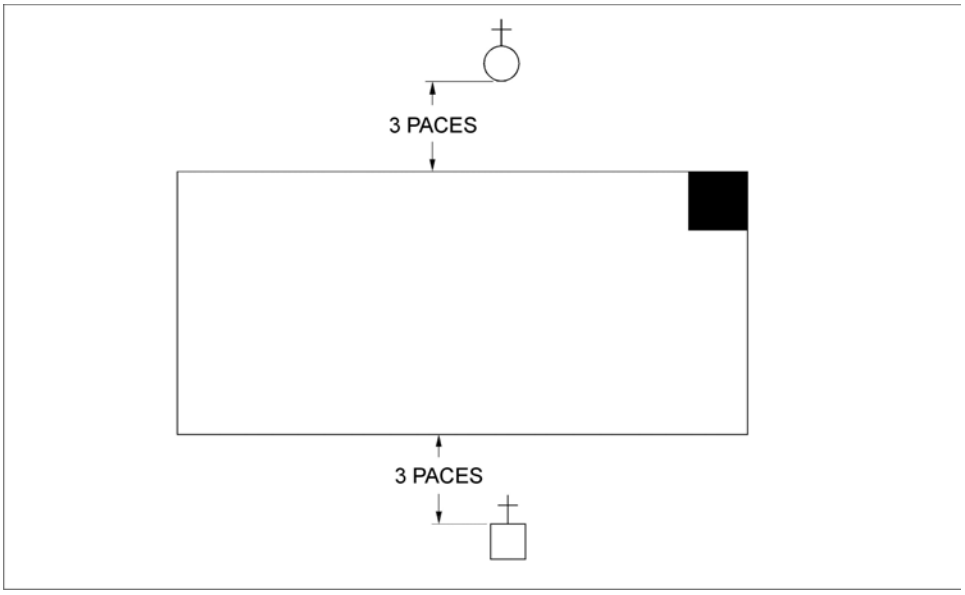

Note. From The Canadian Forces Manual of Drill and Ceremonial (p. 7-2-2), by Director History and Heritage 3-2, 2005, Ottawa, ON: Department of National Defence.

Figure 2 Squad in Line



Figure 2 demonstrates the command positions when a DivO and a DPO are on parade.

When on parade, each squad follows the same procedures to hand over command. Once the DivO / DPO are in their new position(s), the command STAND AT—EASE, is given in succession from the front (right). On the executive word of command of the last DivO / DPO ordering their squad to stand at ease, DivO / DPO turn about and stand at ease together.



Throughout the parade it is important to remember that words of command are to be pronounced clearly and distinctly, with confidence and determination, since they convey an order which is to be promptly obeyed.

Refer to A-CR-CCP-603/PF-001, *Phase Three Instructional Guides*, EO M308.02 (Deliver Words of Command), if further information is required on how to deliver proper words of command.



When paying compliments during the parade, all salutes must be acknowledged and conducted in a sharp manner.

Greeting the RO to Complete the Inspection

Inspections are conducted one squad at a time, normally accompanied by the RO and the reviewing party. The parade commander will give the command NO. 1 SQUAD, STAND FAST, REMAINDER STAND AT—EASE before the inspection begins. The inspection commences with the squad ordered to stand fast.

Unofficial convenience copy of A-CR-CCP-604/PF-001, cached 2026-11-08 from https://app.cadets.gc.ca/cadet-publications/A-CR-CCP-604-PF-001/A-CR-CCP-604-PF-001.pdf.
Verify against the official publication.

As the RO approaches, the DivO / DPO turns right and marches to a position three paces in front of the marker, facing the RO. When the RO approaches, the DivO / DPO will salute (if required) and report the squad.



The following is an example opening report from the DivO / DPO to the RO, when the RO approaches the squad for the inspection.

"Good evening (morning / afternoon) sir (ma'am), Sergeant Jones reporting for number one squad, 25 cadets on parade, ready for your inspection".



If the RO is a local government official, a civilian or a non-commissioned officer (NCO), a salute is not required.

The DivO / DPO will guide the RO through the front and rear of each rank, commencing at the right flank of the front rank and proceeding in a counter-clockwise direction around each rank in turn. When the RO has completed the inspection, the DivO / DPO will position themselves behind the rear rank marker, to acknowledge the RO's completion of the squad's inspection, ask permission to carry on and salute (if required).



The following is an example response from DivO / DPO to the RO, when the RO has completed the inspection of the squad.

"Sir (ma'am), thank you for inspecting number one squad. Permission to carry on?"

Once the RO has begun to move to the next squad, the DivO / DPO executes a right turn and marches, using a series of wheels, back to their command position facing the squad. When in position the DivO / DPO shall give the commands CLOSE ORDER—MARCH and STAND AT—EASE. The DivO / DPO will then turn about to face the front, stand at ease, and await further orders from the parade commander.

As the inspection is being completed, the remaining DivO / DPO will observe the RO and as the RO inspects the rear rank of the preceding squad, the next DivO / DPO shall turn about to face their squad, give the command ATTEN—TION and carry out the inspection sequence for their squad.



Inspections are always carried out at the open order.

Unofficial convenience copy of A-CR-CCP-604/PF-001, cached 2026-11-08 from https://app.cadets.gc.ca/cadet-publications/A-CR-CCP-604-PF-001/A-CR-CCP-604-PF-001.pdf.
Verify against the official publication.

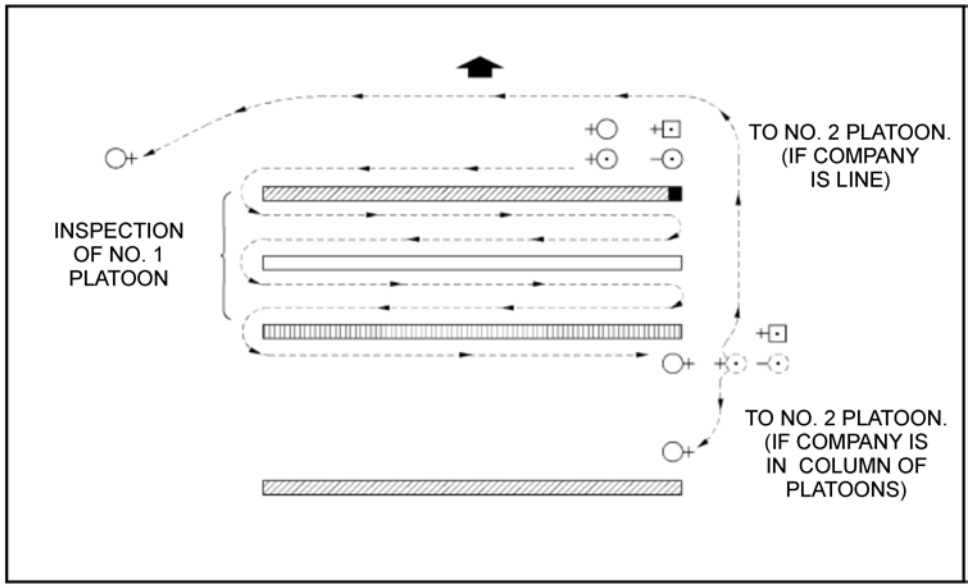

Note. From The Canadian Forces Manual of Drill and Ceremonial (p. 7-3-18), by Director History and Heritage 3-2, 2005, Ottawa, ON: Department of National Defence.

Figure 3 Completing the Inspection

Leading the Squad on the March Past

March pasts may be conducted in column of route or in column of threes, depending on time and space available, level of training and the occasion. The simplest march past is column of route in quick time.

Throughout the march past, when commanded by the parade commander, the DivO / DPO may be required to give the command EYES—RIGHT and EYES—FRONT to their respective squad.



The commands EYES—RIGHT and EYES—FRONT, will be given on the left foot.



If there are turns on the march past, the DivO / DPO may be required to give the commands RIGHT—TURN (called on the left foot) and / or LEFT—TURN (called on the right foot), when directed by the parade commander.

At the end of the march past, the command HALT (called on the left foot) may also be required to be given, when directed by the parade commander.

Column of route. The DivO / DPO is two paces in front of the centre single file of the squad. Column of route is the formation most commonly used to move squads on the march.

When halted in this position and given the command to turn, the DivO / DPO will turn in the appropriate direction, observe the standard pause and march, using a series of wheels, to their appropriate position(s).

Unofficial convenience copy of A-CR-CCP-604/PF-001, cached 2026-11-08 from https://app.cadets.gc.ca/cadet-publications/A-CR-CCP-604-PF-001/A-CR-CCP-604-PF-001.pdf.
Verify against the official publication.

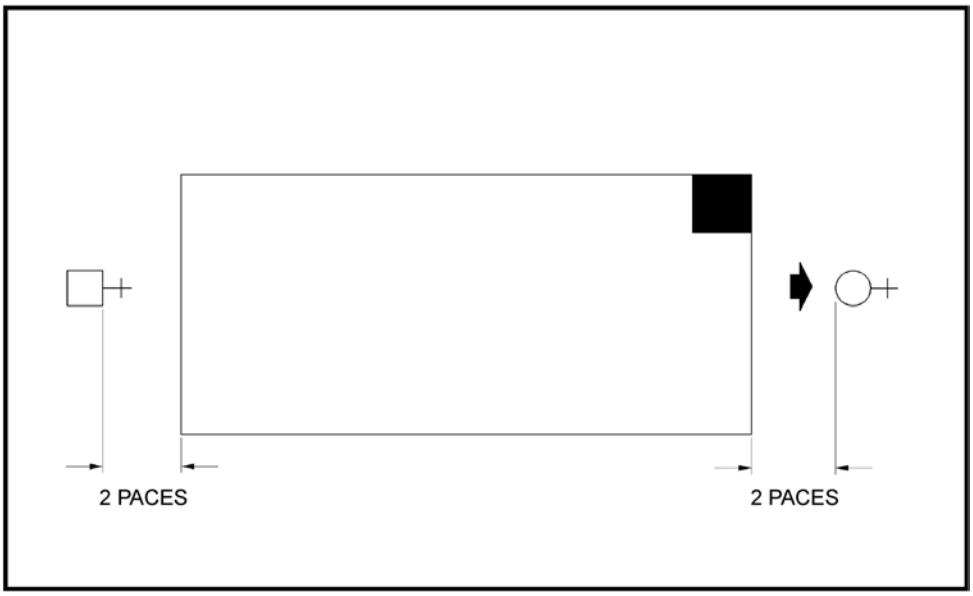

Note. From The Canadian Forces Manual of Drill and Ceremonial (p. 7-2-4), by Director History and Heritage 3-2, 2005, Ottawa, ON: Department of National Defence.

Figure 4 Squad in Column of Route



Figures 4 and 5 demonstrate the command positions when a DivO and a DPO are on parade for the march past, in column of route. If there is no DivO, the DPO will command the division.

Column of threes. A squad in column of threes is in the same formation as when in line, but facing a flank. Column of threes is another formation used to move a squad on the march.

When halted in this position and given the command to turn, the DivO / DPO turn in the appropriate direction and maintain their position(s).

Unofficial convenience copy of A-CR-CCP-604/PF-001, cached 2026-11-08 from https://app.cadets.gc.ca/cadet-publications/A-CR-CCP-604-PF-001/A-CR-CCP-604-PF-001.pdf.
Verify against the official publication.

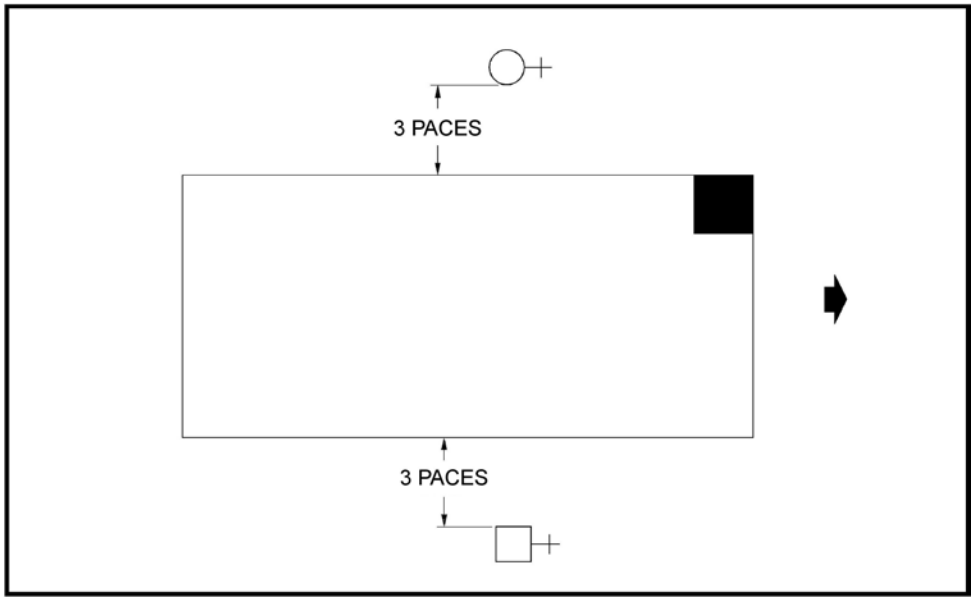

Note. From The Canadian Forces Manual of Drill and Ceremonial (p. 7-2-3), by Director History and Heritage 3-2, 2005, Ottawa, ON: Department of National Defence.

Figure 5 Squad in Column of Threes

Falling Out

When falling out as a DPO, follow the commands of the parade commander.

When assuming the role of a DivO, the following additional steps of falling out are to be conducted:

(1) On the command OFFICERS, FALL—OUT, which is given by the parade commander when the parade is at attention, the DivO marches the most direct route and forms up in a line, five paces in front of, centred on and facing, the parade commander, at arm's length interval (without raising the arm), the deputy parade commander on the right.

(2) When all DivO are present and in line, the deputy parade commander takes a half pace forward.

(3) When ordered by the parade commander to DIS—MISS, the deputy parade commander will step back one half pace. All DivO will observe the standard pause and march straight forward off the parade square, along with the deputy parade commander.

CONFIRMATION OF TEACHING POINT 1

The cadets' commanding a squad will serve as the confirmation of this TP.

END OF LESSON CONFIRMATION

The cadets' commanding a squad will serve as the confirmation of this lesson.

Unofficial convenience copy of A-CR-CCP-604/PF-001, cached 2026-11-08 from https://app.cadets.gc.ca/cadet-publications/A-CR-CCP-604-PF-001/A-CR-CCP-604-PF-001.pdf.
Verify against the official publication.

CONCLUSION

HOMEWORK / READING / PRACTICE

Nil.

METHOD OF EVALUATION

This lesson is assessed IAW A-CR-CCP-604/PG-001, *Phase Four Qualification Standard and Plan*, Chapter 3, Annex B, 408 PC.

CLOSING STATEMENT

Commanding a squad on parade with confidence and determination, will affect how cadets respond to the orders given. Delivering words of command, in a clear and concise manner allows a squad to move as a team in an organized and efficient manner.

INSTRUCTOR NOTES / REMARKS

Where there are a large number of cadets, divide the group into two or three squads and rotate the cadets through as commanders.

REFERENCES

A0-002 A-PD-201-000/PT-000 Director History and Heritage 3-2. (2005). *The Canadian Forces manual of drill and ceremonial*. Ottawa, ON: Department of National Defence.

Unofficial convenience copy of A-CR-CCP-604/PF-001, cached 2026-11-08 from https://app.cadets.gc.ca/cadet-publications/A-CR-CCP-604-PF-001/A-CR-CCP-604-PF-001.pdf.
Verify against the official publication.

THIS PAGE INTENTIONALLY LEFT BLANK

Unofficial convenience copy of A-CR-CCP-604/PF-001, cached 2026-11-08 from https://app.cadets.gc.ca/cadet-publications/A-CR-CCP-604-PF-001/A-CR-CCP-604-PF-001.pdf.
Verify against the official publication.

PARADE SEQUENCE AIDE-MÉMOIRE CARD

✂

PARADE SEQUENCE AIDE-MÉMOIRE CARD

FALLING IN

When falling in as a DPO:
Follow the required commands of the parade commander.

When falling in as a DivO:

1. Stand at ease in succession from the right, once in position.
2. On the command to fall in, come to attention, turn left and march to the division, approaching from the right flank.
3. Halt two paces in front of DPO.
4. March two paces forward (assume the proper command position) and give the command **STAND AT—EASE**.
5. On the executive word of command of the last division ordered to stand at ease, turn about and stand at ease.

GREETING THE RO TO COMPLETE THE INSPECTION

1. Ensure the division is at attention. Give the command **ATTEN—TION** (if required).
2. Turn right and move to a position three paces in front of the marker (check RO's position as required).
3. Salute the RO (if required) and report the division (eg, "Good evening [morning / afternoon] sir [ma'am], Sergeant Jones reporting for number one division, 25 cadets on parade, ready for your inspection").
4. Guide the RO through the ranks.
5. After the inspection, stand to attention behind the rear rank marker and salute (if required) and respond to the RO (eg, "Sir [ma'am], thank you for inspecting number one division. Permission to carry on?").
6. Execute a turn and march back to the front of the division.
7. Give commands **CLOSE ORDER—MARCH** and **STAND AT—EASE** to the division.
8. Turn about to face front, stand at ease and await further orders from the parade commander.

LEADING THE DIVISION ON THE MARCH PAST

- Execute all commands given by the parade commander, as per the parade sequence.
- Assume the correct command positions throughout the march past.
- Give the commands **LEFT—TURN** (as required), **EYES—RIGHT**, **EYES—FRONT**, **RIGHT—TURN** (as required) and **HALT** (as required), as directed by the parade commander.

FALLING OUT

When falling out as a DPO:
Follow the required commands of the parade commander.

When falling out as a DivO:

- On the command to fall out, march the most direct route and form up in position facing the parade commander.
- On the command to dismiss, observe the standard pause and march straight off parade square.

Unofficial convenience copy of A-CR-CCP-604/PF-001, cached 2026-11-08 from https://app.cadets.gc.ca/cadet-publications/A-CR-CCP-604-PF-001/A-CR-CCP-604-PF-001.pdf.
Verify against the official publication.

THIS PAGE INTENTIONALLY LEFT BLANK

Unofficial convenience copy of A-CR-CCP-604/PF-001, cached 2026-11-08 from https://app.cadets.gc.ca/cadet-publications/A-CR-CCP-604-PF-001/A-CR-CCP-604-PF-001.pdf.
Verify against the official publication.