

COMMON TRAINING

PHASE THREE

INSTRUCTIONAL GUIDE

SECTION 1

EO M308.01 – PREPARE A SQUAD FOR PARADE

Total Time:	90 min

PREPARATION

PRE-LESSON INSTRUCTIONS

Resources needed for the delivery of this lesson are listed in the lesson specification located in A-CR-CCP-603/PG-001, Chapter 4. Specific uses for said resources are identified throughout the instructional guide within the TP for which they are required.

Review the lesson content and become familiar with the material prior to delivering the lesson.

Photocopy the drill sequence handout at Annex A and the aide-mémoire card at Annex B as required.

PRE-LESSON ASSIGNMENT

N/A.

APPROACH

An interactive lecture was chosen for TP 1 to introduce drill theory to the cadet.

Demonstration and performance was chosen for TP 2 as it allows the instructor to explain and demonstrate preparing a squad for a parade while providing an opportunity for the cadets to practice the skill under supervision.

INTRODUCTION

REVIEW

N/A.

OBJECTIVES

By the end of this lesson the cadet shall be expected to prepare a squad for parade.

IMPORTANCE

It is important for cadets to be able to prepare a squad for parade as they will be in placed in a team leader role and will need to know the formations and locations of all members on the parade square.

Unofficial convenience copy of A-CR-CCP-603/PF-001, cached 2026-11-08 from https://app.cadets.gc.ca/cadet-publications/A-CR-CCP-603-PF-001/A-CR-CCP-603-PF-001.pdf.
Verify against the official publication.

Teaching point 1 **Explain Drill Theory**

Time: 20 min Method: Interactive Lecture

SQUAD FORMATIONS

The term squad is a generic name for a group of cadets. This term can be interchanged with platoon, flight, division or any other applicable elemental or regimental term.

The squad formation should be implemented when there is a parade strength of less than 32 cadets.

Squad formations are essential to maintain control and ensure uniformity. The instructor shall determine the formation to be used, based on the number of cadets present, to include:

Single Rank. A single rank shall be formed when there are five or fewer cadets.

Two Ranks. Two ranks shall be formed when there are six to nine cadets.

Three Ranks. Three ranks shall be formed when there are 10 or more cadets.

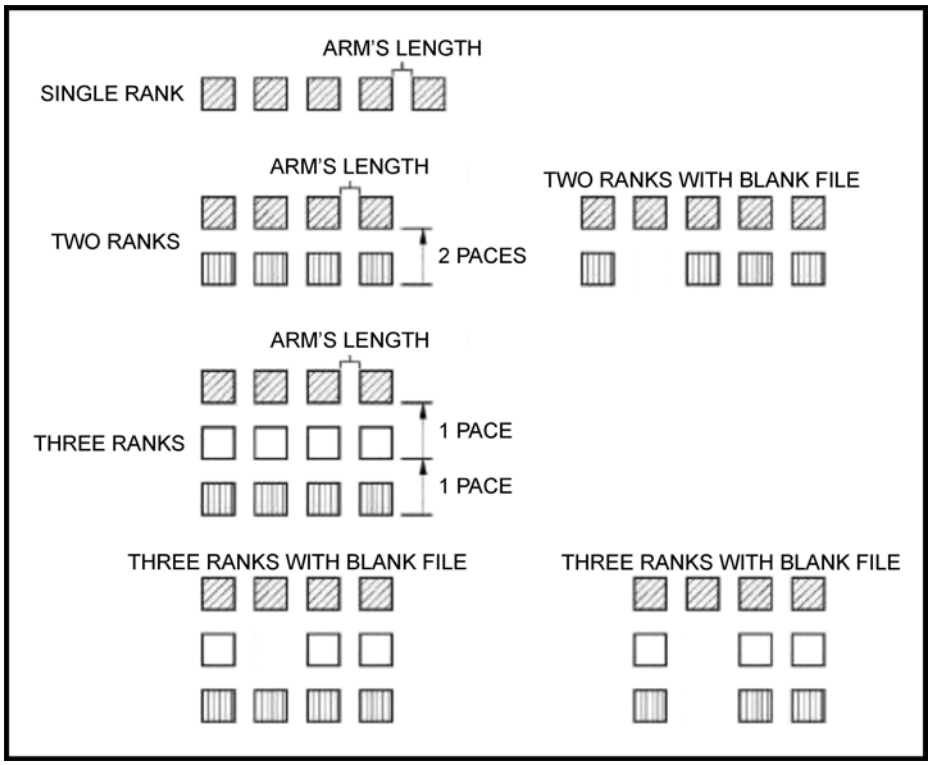

A-PD-201-000/PT-000 (p. 2-2)

Figure 1 Squad Formations

Unofficial convenience copy of A-CR-CCP-603/PF-001, cached 2026-11-08 from https://app.cadets.gc.ca/cadet-publications/A-CR-CCP-603-PF-001/A-CR-CCP-603-PF-001.pdf.
Verify against the official publication.

When there are not enough cadets to form complete files, a file shall be left blank (as illustrated in Figure 1). The file blank shall be the second file from the left.

In two ranks, this blank file is without a rear rank cadet, and in three ranks, this blank file is without a centre and/or rear rank cadet.

The symbol for the Coxswain (Coxn) is:	
The symbol for the Regulating Petty Officer (RPO) is:	
The symbol for Divisional Petty Officer (DPO) is:	
The symbol for the Assistant DPO (ADPO) is:	
The symbol Division Marker (Marker) is:	

Director Cadets 3, 2008, Ottawa, ON: Department of National Defence

Figure 2 Parade Appointment Symbols

COMPANY FORMATIONS

A company consists of two or more divisions. The aim of company drill is to manoeuvre the company as one under the command of a Coxn and assistance of a CPO2. Other senior non-commissioned officers (NCOs) not directly involved with the divisions, shall be supernumeraries and form supernumerary ranks as directed by the Coxn. There shall be seven paces between divisions for all formations.

When space is limited, intervals and distances between divisions may be decreased.

There are three company formations used by cadets, to include:

Line. A company is formed in line when divisions are formed up side-by-side, seven paces apart and aligned facing the front, with parade appointments located in the front and rear of the formation (as illustrated in Figure 3).

To be formed in threes and in line is the common formation when a squad forms up.

Unofficial convenience copy of A-CR-CCP-603/PF-001, cached 2026-11-08 from https://app.cadets.gc.ca/cadet-publications/A-CR-CCP-603-PF-001/A-CR-CCP-603-PF-001.pdf.
Verify against the official publication.

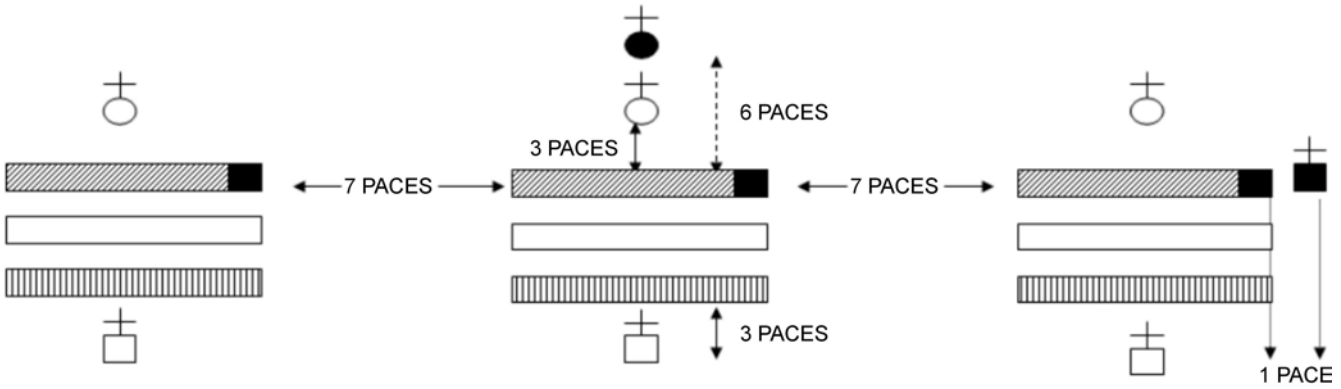

Director Cadets 3, 2008, Ottawa, ON: Department of National Defence

Figure 3 Company in Line

Column of Threes. A company is formed in column of threes when divisions are turned to the right or left of the front, with parade appointments located in their positions in the front and rear of the formation and turned to the right or left with the division (as illustrated in Figure 4).

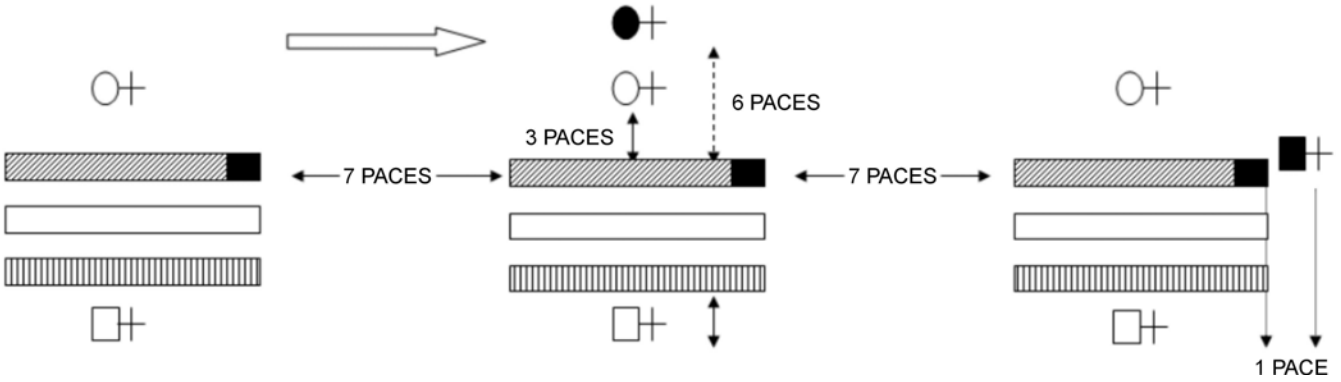

Director Cadets 3, 2008, Ottawa, ON: Department of National Defence

Figure 4 Company in Column of Threes

Column of Route. A company is formed in column of route when divisions are turned to the right or left, with parade appointments positioned to lead or follow the formation (as illustrated in Figure 5).

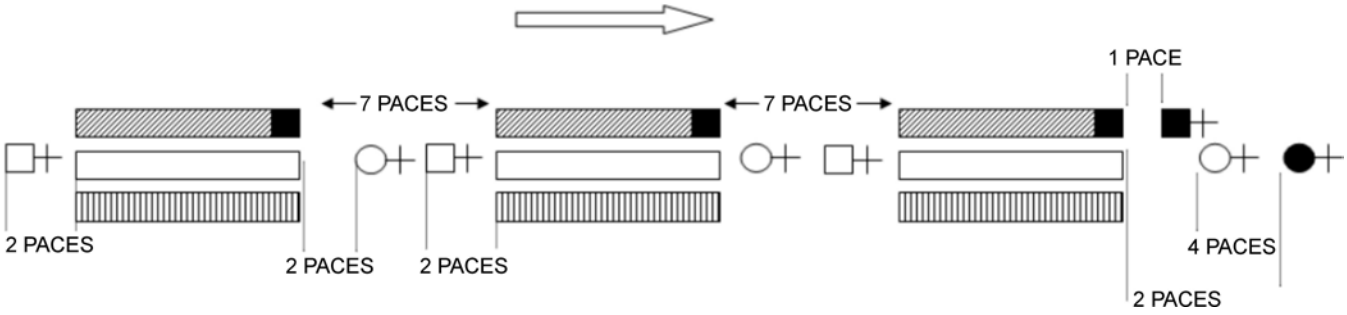

Director Cadets 3, 2008, Ottawa, ON: Department of National Defence

Figure 5 Company in Column of Route

Unofficial convenience copy of A-CR-CCP-603/PF-001, cached 2026-11-08 from https://app.cadets.gc.ca/cadet-publications/A-CR-CCP-603-PF-001/A-CR-CCP-603-PF-001.pdf.
Verify against the official publication.

LOCATION OF PARADE APPOINTMENTS

The unique nature of the cadet unit allows for the adjustment of parade positions to be filled by cadet POs and cadet senior NCOs. The following parade positions are normally filled by cadets when conducting a formal parade:

Coxswain (Coxn). With a company in line or in column of threes, the Coxn is centred three paces in front of the line of division commanders, facing the same direction as the divisions except when addressing the company. With a company in column of route, the Coxn is centred four paces in front of the leading division.

Chief Petty Officer Second Class (CPO2). The CPO2 is an appointment that is seldom assigned in a cadet corps. If applicable, the CPO2 is centred three paces in front of the second single file from the right flank of the company and in line with the CPO2.

Divisional Petty Officer (DPO). With a company in line or in column of threes, the DPO is centred three paces in front of the division. With a company in column of route, the DPO is centred two paces in front of their division.

Assistant Divisional Petty Officer (ADPO). With a company in line or in column of threes, the ADPO is centred three paces in rear of the division. With a company in column of route, the ADPO is centred two paces in the rear of their division.



Prior to handing over to the DPO, the ADPO will be centred three paces in front of the platoon. After handing over to the DPO, the ADPO assumes their position as stated above.

Division Marker (Marker). The marker is the individual placed in the first rank of the first file to indicate the position which a body of cadets will occupy when covering and falling in. In all squad and company formations, the marker remains in the same location.

CONFIRMATION OF TEACHING POINT 1

QUESTIONS

Q1. What are the three squad formations?

Q2. What are the three company formations?

Q3. Where is the DPO located when the formation is in line?

ANTICIPATED ANSWERS

A1. The three squad formations are:

- single rank,
- two ranks, and
- three ranks.

A2. The three company formations are:

- line,
- column of threes, and
- column of route.

A3. The DPO is located three paces in front and centre of the division.

Unofficial convenience copy of A-CR-CCP-603/PF-001, cached 2026-11-08 from https://app.cadets.gc.ca/cadet-publications/A-CR-CCP-603-PF-001/A-CR-CCP-603-PF-001.pdf.
Verify against the official publication.

Teaching point 2 — **Explain, Demonstrate and Have the Cadet Assume the Role of a Team Leader in Preparing a Squad for Parade**

Time: 60 min — Method: Demonstration and Performance

When preparing a squad for parade, the team leader, acting as the ADPO, is responsible to ensure the squad is ready for parade by:

1. having the squad on the parade square by falling in a squad;
2. knowing who is present or absent by calling the roll;
3. ensuring uniformity of the squad by sizing in single rank and reforming threes (twos);
4. ensuring the squad is properly spaced by dressing a squad;
5. ensuring all cadets are well turned out by inspecting a squad; and
6. continuing with the parade by handing over the squad.



The purpose of this TP is to aid the cadets' comprehension of the process they have executed during Phase One and Two when preparing for parade during a training sessions.



If the time allotted is not sufficient for all cadets to assume the role of a team leader in preparing a squad for parade, additional time during colours and sunset shall be used to provide all cadets the opportunity for performance.

ACTIVITY

OBJECTIVE

The objective of this activity is to confirm the ability of a Phase Three cadet, as a team leader, to assume the position of a DPO and prepare a squad for parade.

RESOURCES

N/A.

ACTIVITY LAYOUT

N/A.

ACTIVITY INSTRUCTIONS

Distribute a copy of the drill sequence handout at Annex A and an aide-mémoire card at Annex B to each cadet.

This activity will be conducted IAW Annex A.

Unofficial convenience copy of A-CR-CCP-603/PF-001, cached 2026-11-08 from https://app.cadets.gc.ca/cadet-publications/A-CR-CCP-603-PF-001/A-CR-CCP-603-PF-001.pdf.
Verify against the official publication.



For this activity, it is recommended that instruction take the following format:

(1) Explain and demonstrate the complete skill while cadets observe.

(2) Explain and demonstrate each step required to complete the skill.

(3) Select a cadet to assume the role of team leader and practice the complete skill.

Note: Assistant instructors may be employed for demonstration purposes.

SAFETY

N/A.

CONFIRMATION OF TEACHING POINT 2

The cadets' participation in the activity will serve as the confirmation of this TP.

END OF LESSON CONFIRMATION

The cadets' participation in preparing a squad for parade will serve as the confirmation of this lesson.

CONCLUSION

HOMEWORK/READING/PRACTICE

N/A.

METHOD OF EVALUATION

This EO is assessed IAW A-CR-CCP-603/PG-001, Chapter 3, Annex B, Appendix 2 (308 PC).

CLOSING STATEMENT

When preparing a squad for parade with confidence and determination, it will affect how cadets respond to the orders given. Delivering words of command can allow a squad to move as a team in an organized and efficient manner as all members learn to work together.

INSTRUCTOR NOTES/REMARKS

Cadets shall perform these skills and be given feedback during weekly colours and sunset parades, and ceremonial parades.

Assistant instructors may be required for this lesson.

REFERENCES

A0-002 A-PD-201-000/PT-000 Director History and Heritage 3-2. (2005). *The Canadian Forces Manual of Drill and Ceremonial*. Ottawa, ON: The Department of National Defence.

Unofficial convenience copy of A-CR-CCP-603/PF-001, cached 2026-11-08 from https://app.cadets.gc.ca/cadet-publications/A-CR-CCP-603-PF-001/A-CR-CCP-603-PF-001.pdf.
Verify against the official publication.

THIS PAGE INTENTIONALLY LEFT BLANK

Unofficial convenience copy of A-CR-CCP-603/PF-001, cached 2026-11-08 from https://app.cadets.gc.ca/cadet-publications/A-CR-CCP-603-PF-001/A-CR-CCP-603-PF-001.pdf.
Verify against the official publication.