COMMON TRAINING

PHASE ONE

INSTRUCTIONAL GUIDE

SECTION 3

EO M106.03 – APPLY BASIC MARKSMANSHIP TECHNIQUES

Total Time:	60 min

PREPARATION

PRE-LESSON INSTRUCTIONS

A complete list of resources needed for the instruction of this EO is located in A-CR-CCP-601/PG-001, *Phase One Qualification Standard and Plan,* Chapter 4. Specific uses for said stores are identified throughout the Instructional Guide, within the teaching point for which they are required.

Prior to instructing this lesson the instructor shall:

- review the lesson content, and become familiar with the material; and
- prepare a mock air rifle range prior to the beginning of the lesson.

PRE-LESSON ASSIGNMENT

Nil.

APPROACH

A demonstration and performance was chosen for this lesson as it allows the instructor to explain and demonstrate basic marksmanship techniques, while providing an opportunity for the cadets to practice under supervision.



This lesson may be better presented using a round robin format for those units with large first year groups.

INTRODUCTION

REVIEW

The pertinent review for this lesson, from EO M106.02, will include:

Unofficial convenience copy of A-CR-CCP-601/PF-001, cached 2026-11-08 from https://app.cadets.gc.ca/cadet-publications/A-CR-CCP-601-PF-001/A-CR-CCP-601-PF-001.pdf.
Verify against the official publication.

QUESTIONS

Q1. Why are the individual safety precautions performed?

Q2. What is the purpose of the “safety catch”?

ANTICIPATED ANSWERS

A1. To confirm a rifle is safe.

A2. It prevents a rifle from firing by locking its trigger into place.

OBJECTIVES

By the end of this lesson the cadet shall be expected to apply basic marksmanship techniques to include:

- prone position;
- basic holding;
- basic aiming;
- loading;
- firing; and
- unloading.

Cadets will apply the knowledge gained during this lesson when they participate in any range practice.

IMPORTANCE

These techniques must all be applied in harmony. Improving one while not working on another will not produce the best results in the long run. Perfecting these techniques takes time and concentration. Cadets should remember – PRACTICE MAKES PERFECT!

Teaching point 1 **Explain and demonstrate the prone position.**

Time: 5 min Method: Demonstration and Performance

The first principle of marksmanship is to find a comfortable firing position. A comfortable firing position will enable cadets to fire safely and with much better results. The prone position is the most stable firing position to use.

OBJECTIVES OF A GOOD POSITION



Have cadets down get on the mat and assume the prone position. From here, the instructor is better prepared to observe the cadets imitating the skills being taught.



The instructor shall provide an EXPLANATION and DEMONSTRATION of the complete skill.

The instructor shall also provide an EXPLANATION and DEMONSTRATION of each step required to effectively complete the skill.

Unofficial convenience copy of A-CR-CCP-601/PF-001, cached 2026-11-08 from https://app.cadets.gc.ca/cadet-publications/A-CR-CCP-601-PF-001/A-CR-CCP-601-PF-001.pdf.
Verify against the official publication.

Obtaining a good prone position is one of the most, if not the most, important principle of marksmanship. A good prone position helps to maintain comfort and stability during the firing session. The prone position is assumed when the marksman lies flat, directly behind the rifle, with a very slight angle between their body and the rifle, and in line with the target. The position should be:

- natural;
- without strain;
- comfortable; and
- stable, in that the:
    - body should form an angle with the line of sight;
    - spine should remain straight;
    - left leg should be parallel with the spine;
    - right foot should turn out and point to the right;
    - left foot should either be straight or point towards the right; and
    - right knee should form an angle with the left leg.

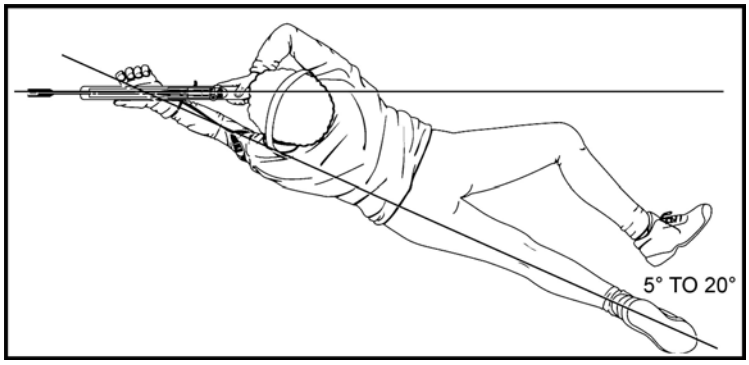

Cadet Marksmanship Program Reference Manual

Figure 1 Prone Position

Cadets will IMITATE the demonstration provided by the instructor for each step within the skill. The instructor(s) will SUPERVISE the cadets during this imitation.

CONFIRMATION OF TEACHING POINT 1



The instructor will divide the group into two, or, by the number of air rifles available.

The instructor shall have one group imitate the actions of the sequence as demonstrated, while the remainder observe. Have them trade places, and repeat.

Unofficial convenience copy of A-CR-CCP-601/PF-001, cached 2026-11-08 from https://app.cadets.gc.ca/cadet-publications/A-CR-CCP-601-PF-001/A-CR-CCP-601-PF-001.pdf.
Verify against the official publication.

Teaching point 2 **Explain and demonstrate how to hold the cadet air rifle.**

Time: 5 min Method: Demonstration and Performance

HOLDING THE CADET AIR RIFLE



The instructor shall provide an EXPLANATION and DEMONSTRATION of the complete skill.

The instructor shall also provide an EXPLANATION and DEMONSTRATION of each step required to effectively complete the skill.

The prone position allows holding to be achieved with as little movement and muscular tension as possible, in that the:

- left elbow should be positioned slightly to the left of the rifle;
- left hand must rest firmly against the sling swivel, and the fingers should be relaxed and not grip the fore end;
- right hand should slightly grip the small of the butt with constant pressure;
- right thumb should be placed on the stock directly behind the rear sight or around the small of the butt;
- right elbow should rest naturally where it falls, not too close or too far from the rifle;
- the shoulders should be straight and form right angles with the spine;
- the butt plate is kept firmly in the hollow of the right shoulder. The right elbow will naturally fall in the same spot throughout the relay; and
- the head rests comfortably on the butt and remains straight.



Cadet Marksmanship Program Reference Manual

Figure 2 Prone Position (Front)

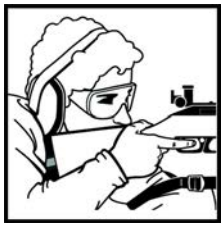

Cadet Marksmanship Program Reference Manual

Figure 3 Prone Position (Side)

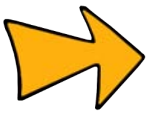

Cadets will IMITATE the demonstration provided by the instructor for each step within the skill. The instructor(s) will SUPERVISE the cadets during this imitation.

Unofficial convenience copy of A-CR-CCP-601/PF-001, cached 2026-11-08 from https://app.cadets.gc.ca/cadet-publications/A-CR-CCP-601-PF-001/A-CR-CCP-601-PF-001.pdf.
Verify against the official publication.

CONFIRMATION OF TEACHING POINT 2



The instructor will divide the group into two, or, by the number of air rifles available. The instructor shall have one group imitate the actions of the sequence as demonstrated, while the remainder observe, and then have them trade places, and repeat.

Teaching point 3 **Explain and demonstrate how to aim the cadet air rifle.**

Time: 5 min Method: Demonstration and Performance

AIMING THE CADET AIR RIFLE

Cadets must constantly strive to maintain proper sight alignment, while obtaining a sight picture. It is the most critical element of the aiming process.

The **aiming process** consists of:

- adopting a comfortable position; and
- ensuring proper body alignment with the target.

Sight Alignment. It is the alignment of the eye, the rear sight, and the front sight. When cadets bring their eye 5 to 15 cm from the rear sight, they will find that the small hole is large enough to look through and see all of the front sight. Proper sight alignment is a matter of centering the front sight tube in the rear sight. The tube will not quite fill the rear sight and cadets will be able to see light around the outside of the tube; we call this a “line of white”.

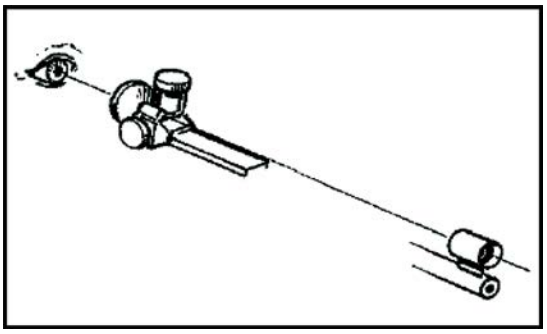

Cadet Marksmanship Program Reference Manual

Figure 4 Sight Alignment

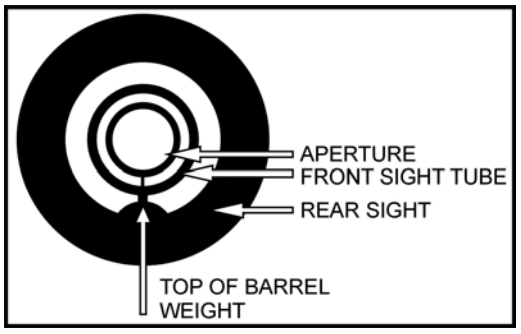

Cadet Marksmanship Program Reference Manual

Figure 5 Line of White

Sight Picture. To obtain a proper sight picture, a bull’s-eye is simply added to the innermost ring. The goal during the aiming process is to maintain proper sight alignment while keeping the bull centered in the front sight.

Unofficial convenience copy of A-CR-CCP-601/PF-001, cached 2026-11-08 from https://app.cadets.gc.ca/cadet-publications/A-CR-CCP-601-PF-001/A-CR-CCP-601-PF-001.pdf.
Verify against the official publication.

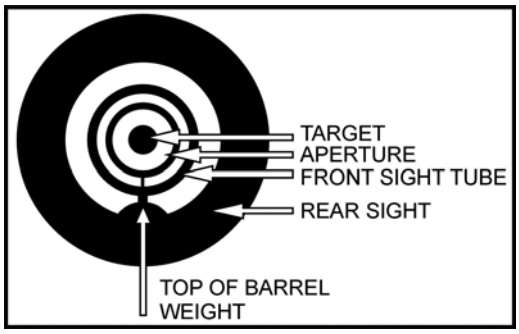

Cadet Marksmanship Program Reference Manual

Figure 6 Sight Picture

CONFIRMATION OF TEACHING POINT 3

QUESTIONS

Q1. What are the two critical elements of the aiming process?

Q2. Sight alignment consists of what three things?

Q3. What is added to the innermost ring to obtain a proper sight picture?

ANTICIPATED ANSWERS

A1. Adopting a comfortable position, and ensuring proper body alignment with the target.

A2. The eye, the rear sight, and the front sight.

A3. A bull's-eye.



The cadets' aiming abilities will be further assessed during future range practices. The instructor(s) will observe cadets during practices, and assess targets to confirm the skill of aiming.

Unofficial convenience copy of A-CR-CCP-601/PF-001, cached 2026-11-08 from https://app.cadets.gc.ca/cadet-publications/A-CR-CCP-601-PF-001/A-CR-CCP-601-PF-001.pdf.
Verify against the official publication.

Teaching point 4 **Explain, demonstrate, and have the cadets practice (dry fire) the actions required on the command "Relay, load, commence firing.**

Time: 15 min Method: Demonstration and Performance

LOADING THE AIR RIFLE



The instructor shall provide an explanation and demonstration of the complete skill.

The instructor shall also provide an explanation and demonstration of each step required to effectively complete the skill.

Then, the cadets, under the supervision of the instructor, will have an opportunity to perform each step.

This will be conducted as a DRY FIRE EXERCISE ONLY.

On the command "Relay load" the following sequence must be followed:

Loading procedure:

1. pick up the rifle with the left hand;
2. ensure the safety catch is in the ON position;
3. pump the air rifle, pausing for three seconds with the pump handle fully extended;
4. bring the pump handle back to closed position;
5. simulate loading a pellet, or load an auto indexing five pellet-clip into the feed track; and
6. close the bolt.

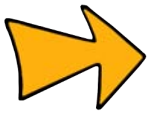

The following methods may be used when pumping the air rifle:

- **Option 1.** Grasp the pistol grip with the right hand. Grasp the pump handle with the left hand. Push downward with the left hand until the pump handle is fully extended. Wait for a few seconds. Using the left hand, bring the pump handle back to the stock of the rifle. The rifle should remain stationary during the pumping process and always point towards the targets.
- **Option 2.** Grasp the pistol grip with the right hand. Grasp the pump handle with the left hand. Place the butt of the rifle under the right arm or shoulder for support. Push downward with the left hand until the pump handle is fully extended. Wait for a few seconds. Using the left hand, bring the pump handle back to the stock of the rifle allowing the underarm and shoulder to help hold the rifle steady when closing the pump handle. Remember that the rifle must always point towards the targets.
- **Option 3. Coach assistance**. Point the rifle in a safe direction and request the assistance from a coach. The coach should move in and pump the rifle using both hands. This should be used as last resorts as any cadet can easily do the above two options.

Unofficial convenience copy of A-CR-CCP-601/PF-001, cached 2026-11-08 from https://app.cadets.gc.ca/cadet-publications/A-CR-CCP-601-PF-001/A-CR-CCP-601-PF-001.pdf.
Verify against the official publication.

FIRING THE CADET AIR RIFLE

On the command “Fire”, the following sequence must be followed:

1. when the RSO gives the command, place safety catch in the OFF position;
2. aim the air rifle at the target;
3. squeeze the trigger;
4. open the bolt, pump the rifle, re-load, aim and fire;
5. repeat the last step until firing is complete;
6. upon completion, place the safety catch in the ON position, open the bolt and partially open the pump lever; and
7. lay the air rifle down.

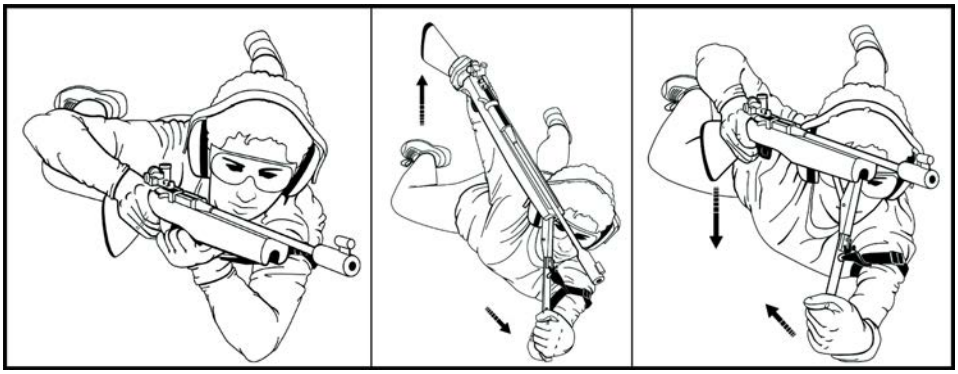

Cadet Marksmanship Program Reference Manual

Figure 7 Pumping the air rifle



The rifle should not be pumped more than once per shot. This air rifle is designed to withstand the pressure based on a single pump stroke.

CONFIRMATION OF TEACHING POINT 4

The instructor will divide the group into two, or into the number of air rifles available. The instructor shall have one group imitate the actions of the sequence as demonstrated, while the remainder observe. Have them trade places, and repeat.

Unofficial convenience copy of A-CR-CCP-601/PF-001, cached 2026-11-08 from https://app.cadets.gc.ca/cadet-publications/A-CR-CCP-601-PF-001/A-CR-CCP-601-PF-001.pdf.
Verify against the official publication.

Teaching point 5 **Explain, demonstrate, and have the cadets practice the actions required on the command "Relay, unload and prepare for inspection."**

Time: 20 min Method: Demonstration and Performance



The instructor shall provide an explanation and demonstration of the complete skill.

The instructor shall also provide an explanation and demonstration of each step required to effectively complete the skill.

Then, the cadets, under the supervision of the instructor, will have an opportunity to perform each step.

This will be conducted as a DRY FIRE EXERCISE ONLY.

UNLOADING AND PREPARING FOR INSPECTION

Follow the unloading sequence of the cadet air rifle, to include:

1. pick up the air rifle;
2. remove the five pellet clip (if used);
3. pump the air rifle (hold for three seconds and close);
4. move the bolt forward (do not insert a pellet);
5. place the safety catch in the OFF position;
6. aim the rifle at the target;
7. squeeze the trigger;
8. open the bolt;
9. place the safety catch in the ON position;
10. open the pump lever 5-8 cm;
11. place the rifle on the shoulder, muzzle pointed down range;
12. wait to be cleared by the RSO; and
13. lay the rifle down.

CONFIRMATION OF TEACHING POINT 5

The instructor will divide the group into two, or into the number of air rifles available. The instructor shall have one group imitate the actions of the sequence as demonstrated, while the remainder observe. Have them trade places, and repeat.

Unofficial convenience copy of A-CR-CCP-601/PF-001, cached 2026-11-08 from https://app.cadets.gc.ca/cadet-publications/A-CR-CCP-601-PF-001/A-CR-CCP-601-PF-001.pdf.
Verify against the official publication.

END OF LESSON CONFIRMATION

The instructor will divide the group into two, or by the number of air rifles available. The instructor shall have one group imitate the actions of the sequence for all teaching points as demonstrated, while the remainder observe, and then have them trade places, and repeat.

CONCLUSION

HOMEWORK/READING/PRACTICE

Nil.

METHOD OF EVALUATION

Assessment of this EO will occur during EO M106.05 (Participate in Marksmanship Familiarization Using the Cadet Air Rifle), where cadets are required to successfully complete the Cadet Air Rifle Handling Test prior to firing.

CLOSING STATEMENT

The first principle of marksmanship is to find a comfortable firing position. A comfortable firing position will enable cadets to fire safely and with much better results. The prone position is the most stable firing position to use.

INSTRUCTOR NOTES/REMARKS

1. Emphasis must be placed on the safety aspects of this lesson.
2. Ensure thorough confirmation by stages.

REFERENCES

A0-027 A-CR-CCP-177/PT-001 D Cdts 3. (2001). *Canadian Cadet Movement: Cadet Marksmanship Programme Reference Manual.* Ottawa, ON: Department of National Defence.

Unofficial convenience copy of A-CR-CCP-601/PF-001, cached 2026-11-08 from https://app.cadets.gc.ca/cadet-publications/A-CR-CCP-601-PF-001/A-CR-CCP-601-PF-001.pdf.
Verify against the official publication.