COMMON TRAINING

PHASE ONE

INSTRUCTIONAL GUIDE

SECTION 2

EO M106.02 – CARRY OUT SAFETY PRECAUTIONS ON THE CADET AIR RIFLE

Total Time:	30 min

PREPARATION

PRE-LESSON INSTRUCTIONS

A complete list of resources needed for the instruction of this EO is located in A-CR-CCP-601/PG-001, *Phase One Qualification Standard and Plan*, Chapter 4. Specific uses for said stores are identified throughout the Instructional Guide, within the teaching point for which they are required.

Prior to instructing this lesson the instructor shall:

- review the lesson content, and become familiar with the material; and
- carry out a safety precaution check on all rifles to be used during this lesson. State to cadets that the rifles have been inspected and are safe to handle.

PRE-LESSON ASSIGNMENT

Nil.

APPROACH

A demonstration and performance was chosen for TPs 1 and 2 as it allows the instructor to explain and demonstrate safety precautions on the cadet air rifle, while providing an opportunity for the cadets to practice under supervision.

An interactive lecture was chosen for TP 3 to orient the cadets to the safety regulations of the Daisy 853C Air rifle and generate interest.

INTRODUCTION

REVIEW

The pertinent review for this lesson from, EO M106.01, will include:

- Having the cadets identify the characteristics of the Daisy 853C, to include:
  - **Action.** Single pump pneumatic, straight pull-bolt.
  - **Calibre.** 0.177 calibre (4.5 mm).
  - **Safety.** Manual cross-bolt trigger block with red indicator.

Unofficial convenience copy of A-CR-CCP-601/PF-001, cached 2026-11-08 from https://app.cadets.gc.ca/cadet-publications/A-CR-CCP-601-PF-001/A-CR-CCP-601-PF-001.pdf.
Verify against the official publication.

- **Loading.** Single or auto indexing five-shot clip.
- **Muzzle Velocity.** 150.8 metres per second.

- Having the cadets identify parts of the Daisy 853C by physically pointing to them and naming them, to include:
  - butt plate,
  - small of the butt (pistol grip),
  - sling bracket (hand stop),
  - trigger,
  - trigger guard,
  - safety catch,
  - bolt,
  - pump lever,
  - muzzle,
  - barrel with barrel weight, and
  - feed track.

OBJECTIVES

By the end of this lesson the cadet shall be expected to carry out individual safety precautions on the cadet air rifle.

IMPORTANCE

Safety precautions are essential to ensure everyone's safety on the range. Every time a cadet picks up a rifle or steps on a range, they must have safety in mind and check to ensure the rifle is safe (an individual safety precaution check when receiving, handing over, or returning to a rifle). Even when a rifle is presumably safe, it is to be checked again.

Teaching point 1 **Explain and demonstrate safe rifle status for the Cadet Air Rifle.**

Time: 10 min Method: Demonstration and Performance

REMOVING A RIFLE FROM THE CASE

The rifle case should be clearly marked on the outside with an arrow, indicating in what direction the rifle inside is pointing. This will ensure that, when the case is opened, the rifle is pointing in a safe direction. The following steps must be followed when removing a rifle from its case:

1. Place the rifle case on a flat surface and ensure the arrow is pointing in a safe direction.
2. Open the case.
3. Cock the action (leave the bolt to the rear).
4. Confirm that the safety catch is ON.
5. Confirm that the pumping lever is partially open.

Unofficial convenience copy of A-CR-CCP-601/PF-001, cached 2026-11-08 from https://app.cadets.gc.ca/cadet-publications/A-CR-CCP-601-PF-001/A-CR-CCP-601-PF-001.pdf.
Verify against the official publication.

6. Slide the safety rod in the barrel towards the bolt until it can be seen in the feed track.

7. Remove the rifle from the case.

8. Remove the safety rod when you are on the firing line.

SAFETY CATCH AND SECURITY MEASURES

The safety catch is a mechanism that, once engaged, prevents a rifle from firing by locking its trigger into place. It is located just in front of the trigger, on the trigger guard. To engage the safety catch (ON) it must be pushed towards the right **so no red can be seen**. To fire, the safety catch must be pushed towards the left in the OFF position and a red mark must be seen on it. For maximum security, it is recommended that the safety catch be kept engaged until the rifle is ready for firing.

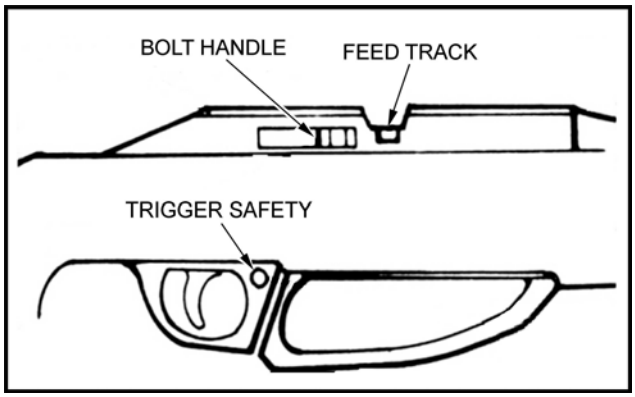

Daisy 853C Operational Manual

Figure 1 Safety Catch

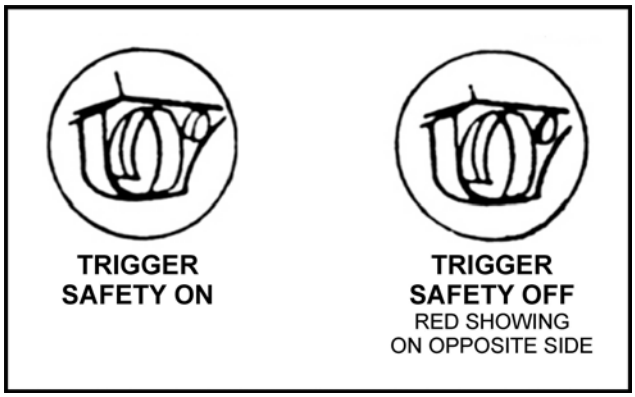

Daisy 853C Operational Manual

Figure 2 Safety Catch Detail View

SAFETY ROD

To ensure that air rifles are not removed from the firing point or stored with a pellet in the chamber or barrel, a safety rod is to be inserted in the barrel from the muzzle end. It consists of two sections of doweling joined together in a “T” shape, and may be made of varying materials. Dimensions are detailed in Figure 6-2-3. The tip of the safety rod is to be coloured red so that it is visible in the feed track with the bolt fully to the rear.

Unofficial convenience copy of A-CR-CCP-601/PF-001, cached 2026-11-08 from https://app.cadets.gc.ca/cadet-publications/A-CR-CCP-601-PF-001/A-CR-CCP-601-PF-001.pdf.
Verify against the official publication.

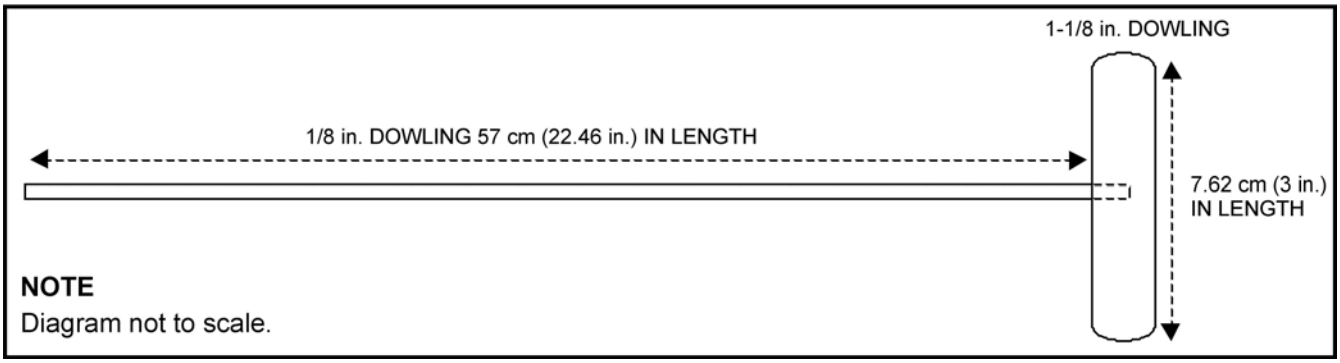

Cadet Marksmanship Program Reference Manual

Figure 3 Safety Rod

SAFE RIFLE STATUS



The instructor shall demonstrate and explain points 1, 2 and 3 of the safe rifle status checks using full demonstrations and explanations prior to each new skill, followed by a chance for the cadets to imitate the skill under supervision.

When not being handled on the range or in a training environment, the air rifle must be in a safe status. The following options denote various states of “safe rifle status”:

1. **In the rifle case:**
   a. The safety catch is ON.
   b. The bolt is forward.
   c. The action is not cocked.
   d. The safety rod is in the case but not in the barrel.
   e. The pump lever is partially open (5 to 8 cm).
2. **On the firing line:**
   a. The safety catch is ON.
   b. The bolt is to the rear.
   c. The pump lever is partially open.
3. **Off the firing line:**
   a. The safety catch is on.
   b. The bolt is to the rear.
   c. The safety rod is in the barrel (visible in the feed track).
   d. The pump lever is partially open.

Unofficial convenience copy of A-CR-CCP-601/PF-001, cached 2026-11-08 from https://app.cadets.gc.ca/cadet-publications/A-CR-CCP-601-PF-001/A-CR-CCP-601-PF-001.pdf.
Verify against the official publication.

CONFIRMATION OF TEACHING POINT 1

Have the cadets, under supervision, perform the steps for “Safe Rifle Status” for:

1. on the firing line; and
2. off the firing line.

Teaching point 2 **Carry out individual safety precautions.**

Time: 10 min Method: Demonstration and Performance

INDIVIDUAL SAFETY PRECAUTIONS



The instructor shall provide an EXPLANATION and DEMONSTRATION of the complete skill.

The instructor shall also provide an EXPLANATION and DEMONSTRATION of each step required to effectively complete the skill.

Upon receiving a rifle, or when the “Safe Rifle Status” is uncertain, individual safety precautions shall be done to confirm that the rifle is safe. An individual must ensure that:

1. the bolt is open fully to the rear;
2. the safety catch is in the ON position;
3. the pump lever is left partially open; and
4. a safety rod is placed in the barrel.

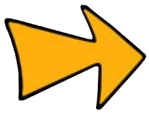

Cadets will IMITATE the demonstration provided by the instructor for each step within the skill. The instructor(s) will SUPERVISE the cadets during this imitation.

CONFIRMATION OF TEACHING POINT 2

Have cadets carry out individual safety precautions. Cadets will also be required to perform this skill during their air rifle handling test.

Teaching point 3 **Explain and demonstrate safety regulations for the cadet air rifle.**

Time: 5 min Method: Interactive Lecture

SAFETY REGULATIONS

Safety regulations are all common sense and are easy to apply when people understand that they are necessary to help prevent accidents with the air rifle. Regulations include:

1. treating the air rifle as if it is loaded;
2. never pointing the air rifle at anyone;

Unofficial convenience copy of A-CR-CCP-601/PF-001, cached 2026-11-08 from https://app.cadets.gc.ca/cadet-publications/A-CR-CCP-601-PF-001/A-CR-CCP-601-PF-001.pdf.
Verify against the official publication.

3. holding the rifle vertically when moving to and from the firing point;
4. leaving fingers off the trigger until ready to fire;
5. wearing safety glasses/goggles; and
6. employing hygiene on the range by washing hands after every practice.



The Canadian Firearms Centre safety training teaches that the vital four "**ACTS**" of firearm safety. The acronym "**ACTS**" stands for:

- **A**ssume every firearm is loaded.
- **C**ontrol the muzzle direction at all times.
- **T**rigger finger must be kept off the trigger and out of the trigger guard.
- **S**ee that the firearm is unloaded – prove it safe.

CONFIRMATION OF TEACHING POINT 3

QUESTIONS

Q1. Why do we follow safety regulations?

Q2. What are some common sense safety regulations?

Q3. What does the acronym "ACTS" stand for?

ANTICIPATED ANSWERS

A1. To help prevent accidents with the air rifle.

A2. Any from list taught:

(1) Treating the air rifle as if it is loaded.

(2) Never point the air rifle at anyone.

(3) Holding the rifle vertically when moving to and from the firing point.

(4) Leaving fingers off the trigger until ready to fire.

(5) Wearing safety glasses/goggles.

(6) Employing hygiene on the range by washing hands after every practice.

A3. **ACTS** stands for; **A**ssume every firearm is loaded, **C**ontrol the muzzle direction at all times, **T**rigger finger must be kept off the trigger and out of the trigger guard, **S**ee that the firearm is unloaded – prove it safe.

Unofficial convenience copy of A-CR-CCP-601/PF-001, cached 2026-11-08 from https://app.cadets.gc.ca/cadet-publications/A-CR-CCP-601-PF-001/A-CR-CCP-601-PF-001.pdf.
Verify against the official publication.

END OF LESSON CONFIRMATION

QUESTIONS

Q1. What does the arrow on the rifle case indicate?

Q2. How do we know if the safety catch is ON?

Q3. What are the vital four "**ACTS**" of firearm safety?

ANTICIPATED ANSWERS

A1. The direction of the rifle inside the case.

A2. No red can be seen.

A3. **ACTS** stands for; **A**ssume every firearm is loaded, **C**ontrol the muzzle direction at all times, **T**rigger finger must be kept off the trigger and out of the trigger guard, **S**ee that the firearm is unloaded – prove it safe.

CONCLUSION

HOMEWORK/READING/PRACTICE

Nil.

METHOD OF EVALUATION

Assessment of this EO will occur during EO M106.05 (Participate in Marksmanship Familiarization Using the Cadet Air Rifle), where cadets are required to successfully complete the Cadet Air Rifle Handling Test prior to firing.

CLOSING STATEMENT

Being able to carry out safety precautions on the cadet air rifle is essential for functioning safely on the range following directions given on the range, and successfully performing a handling test.

INSTRUCTOR NOTES/REMARKS

Emphasis must be placed on the safety aspects of this lesson.

REFERENCES

A0-027 A-CR-CCP-177/PT-001 D Cdts 3. (2001). *Canadian Cadet Movement: Cadet Marksmanship Programme Reference Manual*. Ottawa, ON: Department of National Defence.

Unofficial convenience copy of A-CR-CCP-601/PF-001, cached 2026-11-08 from https://app.cadets.gc.ca/cadet-publications/A-CR-CCP-601-PF-001/A-CR-CCP-601-PF-001.pdf.
Verify against the official publication.

THIS PAGE INTENTIONALLY LEFT BLANK

Unofficial convenience copy of A-CR-CCP-601/PF-001, cached 2026-11-08 from https://app.cadets.gc.ca/cadet-publications/A-CR-CCP-601-PF-001/A-CR-CCP-601-PF-001.pdf.
Verify against the official publication.