COMMON TRAINING

ALL TRAINING LEVELS

INSTRUCTIONAL GUIDE
PHYSICAL ACTIVITIES

SECTION 3

EO CX05.02 – PARTICIPATE IN A TOURNAMENT

Total Time:	9 x 30 min

PREPARATION

PRE-LESSON INSTRUCTIONS

Resources needed for the delivery of this lesson are listed in the lesson specification located in A-CR-CCP-601/PG-001, *Phase One, Qualification Standard and Plan*, Chapter 4. Specific uses for said resources are identified throughout the instructional guide within the TP for which they are required.

Review the lesson content and become familiar with the material prior to delivering the lesson.

Refer to EO M105.01 for a list of sports to select from and rules associated with each.

Refer to the warm-up and the cool-down located at Annexes A and B of EO MX04.01 (Participate in 60 Minutes of Moderate- to Vigorous-Intensity Physical Activity and Track Participation in Physical Activities).

Select a tournament and refer to the following attachments for an overview of how to conduct the selected tournament:

- Attachment A–Round Robin,
- Attachment B–Ladder,
- Attachment C–Pyramid,
- Attachment D–Single Elimination, and
- Attachment E–Double Elimination.

PRE-LESSON ASSIGNMENT

Nil.

APPROACH

A practical activity was chosen for this lesson as it allows the cadets to participate in a tournament in a safe and controlled environment.

INTRODUCTION

REVIEW

Nil.

Unofficial convenience copy of A-CR-CCP-601/PF-001, cached 2026-11-08 from https://app.cadets.gc.ca/cadet-publications/A-CR-CCP-601-PF-001/A-CR-CCP-601-PF-001.pdf.
Verify against the official publication.

OBJECTIVES

By the end of this lesson the cadet shall have participated in a tournament.

IMPORTANCE

It is important for cadets to participate in a tournament because it is an activity that promotes camaraderie and a healthy lifestyle, while meeting the Cadet Program aim.

Unofficial convenience copy of A-CR-CCP-601/PF-001, cached 2026-11-08 from https://app.cadets.gc.ca/cadet-publications/A-CR-CCP-601-PF-001/A-CR-CCP-601-PF-001.pdf.
Verify against the official publication.

Teaching point 1 **Have the cadets participate in a tournament.**

Time: 9 x 30 min Method: Practical Activity

BACKGROUND KNOWLEDGE

THE WARM-UP

Purpose of a Warm-Up

A warm-up session is composed of light cardiovascular activities and stretches designed to:

- gradually increase respiratory action and heart rate;
- expand the muscles' capillaries to accommodate the increase in blood circulation;
- raise the muscle temperature to facilitate reactions in muscle tissue; and
- stretch the muscles.

General Warm-Up

This part of the warm-up prepares the cardiovascular system and muscular system for the stretching portion of the warm-up. Warm-up activities could include brisk walking, light jogging, or simple games that elevate the heart rate such as tag.

Guidelines for Stretching

The following guidelines should be followed while stretching to prepare for physical activity and to help prevent injury:

- Stretch all major muscle groups, including the back, chest, legs, and shoulders.
- Never bounce while stretching.
- Hold each stretch for 10–30 seconds to let the muscles release fully.
- Repeat each stretch two to three times.
- When holding a stretch, support the limb at the joint.
- Static stretching, which is stretching a muscle and holding it in position without discomfort for 10–30 seconds, is considered the safest method.
- Stretching helps to relax the muscles and improve flexibility, which is the range of motion in the joints.
- As a guide, allow 10 minutes to warm up for every hour of physical activity.

The stretches chosen should focus on the areas of the body that will be used the most during the activity. Additional information on stretching is located at EO M105.01, Attachment A.

THE COOL-DOWN

Purpose of a Cool-Down

A cool-down is composed of light cardiovascular activities and stretches designed to:

- allow the body time to slowly recover from physical activity and to help prevent injury;
- prepare the respiratory system to return to its normal state; and

Unofficial convenience copy of A-CR-CCP-601/PF-001, cached 2026-11-08 from https://app.cadets.gc.ca/cadet-publications/A-CR-CCP-601-PF-001/A-CR-CCP-601-PF-001.pdf.
Verify against the official publication.

- stretch the muscles to help relax and restore them to their resting length.

The stretches chosen should focus on the areas of the body that were used the most during the muscular flexibility activity. Additional information on stretching is located at EO M105.01, Attachment A.

ACTIVITY

OBJECTIVE

The objective of this activity is to provide cadets the opportunity to participate in a tournament.

RESOURCES

- Sports / safety equipment required for the selected sport,
- First aid kit,
- Whistles,
- Stopwatch, and
- Schedule of competition.

ACTIVITY LAYOUT

Set up the training area for the selected sport.

ACTIVITY INSTRUCTIONS

1. Have the cadets participate in an introductory briefing, to include:
    a. an overview of the sport(s) that will be played during the tournament,
    b. type of tournament,
    c. rules of the tournament,
    d. organization of the draw, and
    e. location of first aid post.
2. Have the cadets participate in a warm-up session composed of light cardiovascular activities and stretches.
3. Have the cadets participate in the selected tournament.
4. Have the cadets participate in a cool-down session composed of light cardiovascular activities and stretches.

SAFETY

- Ensure cadets are aware of the rules and regulations.
- Ensure constant supervision throughout the activity.
- Ensure a first aid station / kit is readily accessible.
- Ensure a first-aider is identified at the start of the activity and is available at all times.

Unofficial convenience copy of A-CR-CCP-601/PF-001, cached 2026-11-08 from https://app.cadets.gc.ca/cadet-publications/A-CR-CCP-601-PF-001/A-CR-CCP-601-PF-001.pdf.
Verify against the official publication.

CONFIRMATION OF TEACHING POINT 1

The cadets' participation in the tournament will serve as the confirmation of this TP.

END OF LESSON CONFIRMATION

The cadets' participation in the tournament will serve as the confirmation of this lesson.

CONCLUSION

HOMEWORK / READING / PRACTICE

Nil.

METHOD OF EVALUATION

Nil.

CLOSING STATEMENT

Tournaments are fun activities that promote physical fitness, which is part of the aim of the Cadet Program. Participating in physical activities can help you:

- improve your health;
- do better in school;
- improve your fitness;
- grow stronger;
- have fun being active with friends;
- feel happier;
- maintain a healthy body weight;
- improve your self-confidence; and
- learn new skills.

INSTRUCTOR NOTES / REMARKS

Activities chosen for this training are not limited to the list presented but must be age appropriate.

Activities should be chosen based on equipment and facilities accessible to the corps / squadron.

REFERENCES

A0-050 A-PD-050-015/PT-002 Directorate of Physical Education, Recreation and Amenities. (1989). *Physical fitness training in the Canadian Forces* (Vol. 2). Ottawa, ON: Department of National Defence.

C0-187 San Diego County Office of Education. *After school physical activity: Types of tournaments*. Retrieved October 3, 2008, from http://www.afterschoolpa.com/print/typesoftournaments.html

Unofficial convenience copy of A-CR-CCP-601/PF-001, cached 2026-11-08 from https://app.cadets.gc.ca/cadet-publications/A-CR-CCP-601-PF-001/A-CR-CCP-601-PF-001.pdf.
Verify against the official publication.

THIS PAGE INTENTIONALLY LEFT BLANK

Unofficial convenience copy of A-CR-CCP-601/PF-001, cached 2026-11-08 from https://app.cadets.gc.ca/cadet-publications/A-CR-CCP-601-PF-001/A-CR-CCP-601-PF-001.pdf.
Verify against the official publication.

ROUND ROBIN TOURNAMENT

Recommended Use for a Round Robin Tournament

Round robin tournaments are best for league play or one-day tournaments that guarantee a certain number of games. All participants / teams play each other at least once. If there are a large number of participants / teams, a second, third or even fourth pool may be used.



Pool. A group of contestants who compete against each other in a tournament for the right to advance.

The number of courts or fields usually determines the number of pools. This is easy for participants / teams because they play all their games in the same location. The participants / teams may be used as referees, scorekeepers and linesmen during the round robin tournament.

The smaller the number of participants / teams in the pool, the shorter time it takes to complete the pool. Four to six participants / teams per pool are best.

To ensure fairness is shown to participants / teams, when making the pool, names should be chosen randomly (eg, pull the names out of a hat) and placed in the draw.

When using a round robin for a one-day tournament it may be combined with a single elimination tournament. The pool winners and runners-up may fill out a single elimination bracket. These participants / teams will play for the championship.

A tiebreaker system may be put in place before the start of the tournament (eg, points for versus points against).

Sample Draws

To arrange the rounds and the game schedule for an event for an even number of entries, keep the first entry constant and rotate the remaining as follows:

Round 1	Round 2	Round 3	Round 4	Round 5	Round 6	Round 7
1 - 8	1 - 2	1 - 3	1 - 4	1 - 5	1 - 6	1 - 7
2 - 7	3 - 8	4 - 2	5 - 3	6 - 4	7 - 5	8 - 6
3 - 6	4 - 7	5 - 8	6 - 2	7 - 3	8 - 4	2 - 5
4 - 5	5 - 6	6 - 7	7 - 8	8 - 2	2 - 3	3 - 4

Note. Created by Director Cadets 3, 2007, Ottawa, ON: Department of National Defence.

Figure A-1 Robin Draw With an Even Number of Participants



Bye. A term used when a participant / team moves into the next round of competition without participating in the previous round due to an uneven number of teams.

Unofficial convenience copy of A-CR-CCP-601/PF-001, cached 2026-11-08 from https://app.cadets.gc.ca/cadet-publications/A-CR-CCP-601-PF-001/A-CR-CCP-601-PF-001.pdf.
Verify against the official publication.

THIS PAGE INTENTIONALLY LEFT BLANK

Unofficial convenience copy of A-CR-CCP-601/PF-001, cached 2026-11-08 from https://app.cadets.gc.ca/cadet-publications/A-CR-CCP-601-PF-001/A-CR-CCP-601-PF-001.pdf.
Verify against the official publication.

LADDER TOURNAMENT

Recommended Use for a Ladder Tournament

The ladder tournament is the most popular form of extended tournaments (eg, racquet clubs, league play). It is best with pairs or individual participants such as racquet sports. Ladders may be created by ability grouping (eg, beginner, intermediate or advanced). Players / teams challenge the player / team above them on the ladder.

If the challenger wins, they exchange places on the ladder with the loser. If the challenger loses the competition, they stay where they are on the ladder.

Even though the tournament coordinator may modify the rules to suit the nature of the competition, possible rules for planning a ladder tournament are:

- Each contestant is permitted to challenge the player immediately above him / her, or up to two or three above.
- Provided the player challenged is not already involved in a previous challenge, he / she must accept the invitation within a given period.
- If the challenger wins, or the challenge is not accepted, the positions on the board are switched.

Challenges must be accepted and played within a certain time limit, usually one week. If a participant / team does not challenge within the time limit, they move down the ladder. Usually participants / teams are not allowed to challenge the same participant / team twice in a row.

Sample Draw

To ensure fairness is shown to participants / teams, when making the pool, names should be chosen randomly (eg, pull the names out of a hat).

If the number of entries to a ladder tournament is large, more than one ladder may be used. A player wishing to enter the competition late must challenge the player at the bottom of the lowest ladder.

Upon reaching the top of the ladder, a contestant may challenge the player at the bottom of the next higher ladder.

A winner of a ladder tournament may be declared on a set date, or the tournament may continue until the participants / teams decide that the tournament is over (eg, the participant / team at the top of the ladder cannot be beaten).

Byes

There are no byes in a ladder tournament.

Unofficial convenience copy of A-CR-CCP-601/PF-001, cached 2026-11-08 from https://app.cadets.gc.ca/cadet-publications/A-CR-CCP-601-PF-001/A-CR-CCP-601-PF-001.pdf.
Verify against the official publication.

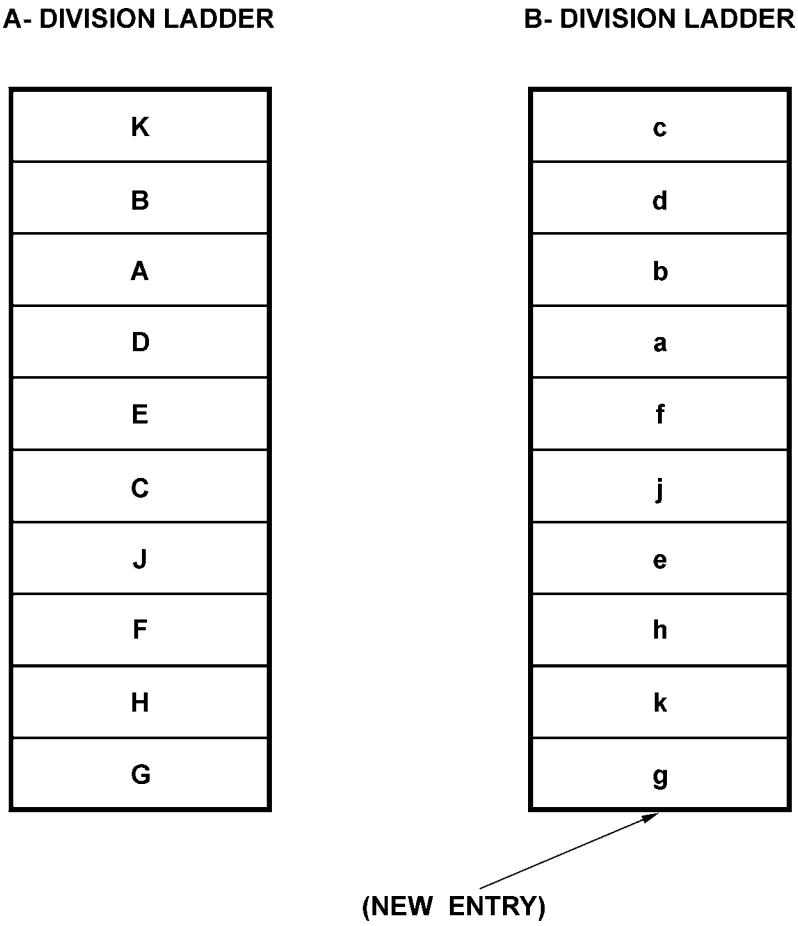

Note. Created by Director Cadets 3, 2007, Ottawa, ON: Department of National Defence.

Figure B-1 Ladder Draw

Unofficial convenience copy of A-CR-CCP-601/PF-001, cached 2026-11-08 from https://app.cadets.gc.ca/cadet-publications/A-CR-CCP-601-PF-001/A-CR-CCP-601-PF-001.pdf.
Verify against the official publication.

PYRAMID TOURNAMENT

Recommended Use for a Pyramid Tournament

The pyramid tournament is a popular form of an extended tournament (eg, racquet clubs, league play). A pyramid tournament is similar to a ladder tournament, but the board is in the form of a pyramid, with one participant / team at the top, two in the next row, three in the next, and so on. It is best with pairs or individual participants such as racquet sports. Players / teams challenge the player / team above them on the pyramid. A pyramid tournament gives participants / teams greater opportunity to challenge opponents because the step above them has more participants / teams listed.

If the challenger wins, they exchange places on the pyramid with the loser. If the challenger loses the competition, they stay where they are on the pyramid.

Challenges must be accepted and played within a certain time limit, usually one week. If a participant / team does not challenge within the time limit, they move down the pyramid. Usually participants / teams are not allowed to challenge the same participant / team twice in a row.

Sample Draw

To ensure fairness is shown to participants / teams, when making the pool, names should be chosen randomly (eg, pull the names out of a hat).

A winner of a pyramid tournament may be declared on a set date decided by the organizer, or the tournament may continue until the participants / teams decide that the tournament is over (eg, the participant / team at the top of the pyramid cannot be beaten).

Byes

There are no byes in a pyramid tournament.

Unofficial convenience copy of A-CR-CCP-601/PF-001, cached 2026-11-08 from https://app.cadets.gc.ca/cadet-publications/A-CR-CCP-601-PF-001/A-CR-CCP-601-PF-001.pdf.
Verify against the official publication.

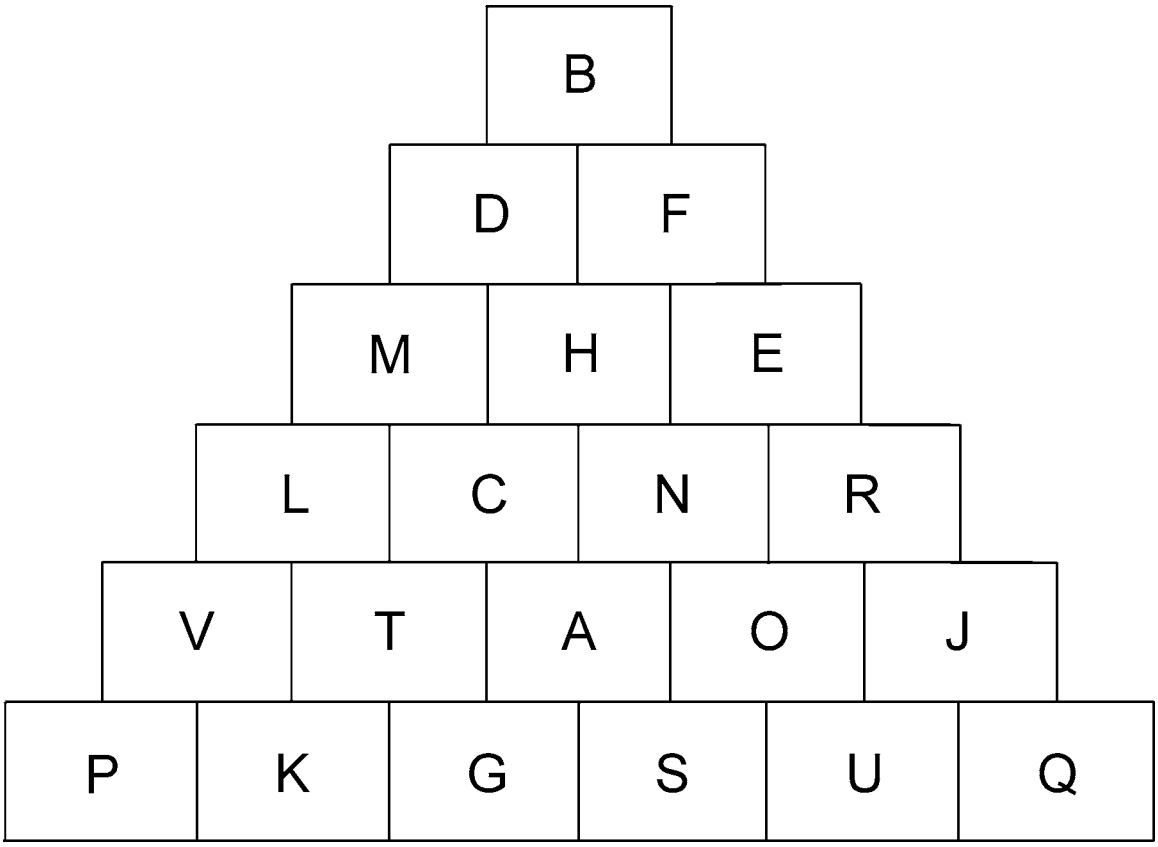

Note. Created by Director Cadets 3, 2007, Ottawa, ON: Department of National Defence.

Figure C-1 Pyramid Draw

Unofficial convenience copy of A-CR-CCP-601/PF-001, cached 2026-11-08 from https://app.cadets.gc.ca/cadet-publications/A-CR-CCP-601-PF-001/A-CR-CCP-601-PF-001.pdf.
Verify against the official publication.

SINGLE ELIMINATION TOURNAMENT

Recommended Use for a Single Elimination Tournament

The single elimination tournament is best used when there are a large number of entries, a short period of time and a limited number of courts / fields. It is the easiest of all tournaments to run. When participants / teams win, they continue to play. When participants / teams lose, they are eliminated from the tournament.

If there are a large number of participants / teams, multiple single elimination tournaments may be used. Participants / teams may be divided into skill levels (eg, beginner, intermediate and advanced) as three separate tournaments. This is a good format to use at the end of a round robin tournament with more than one pool, to determine an overall winner.

Sample Draws

To ensure fairness is shown to participants / teams, when making the pool, names should be chosen randomly (eg, pull the names out of a hat).

The maximum number of games to be played is equal to the number of entries minus one. If there are 12 players or teams, 11 games will be necessary to determine the winner.

The number of entries in Round 2 and subsequent rounds is always a power of 2 through the use of byes during Round 1.

Seeded Players

This term refers to outstanding players or teams who are placed in the draw in positions where they should, assuming they win all their matches, meet in the quarter or semifinals. The intent is to prevent the top competitors from meeting in the early rounds. There should be no more than 2 seeds to every 16 entries.

When seeded players are present (eg, when using a round robin combined with a single elimination tournament), the seeded players should be placed in the draw in positions where they should not meet before the quarters or semifinals.

Byes

A bye occurs in the single or double elimination competition when the number of entries is not a power of 2 (eg, 2, 4, 8, 16, 32).

When the number of entry is not a power of two, it is necessary to have a number of byes. All byes must be given in the first series so that the number of entries remaining in the subsequent series is always a power of 2.

When calculating the number of byes, the number of entries is subtracted from the next highest power of 2.

Unofficial convenience copy of A-CR-CCP-601/PF-001, cached 2026-11-08 from https://app.cadets.gc.ca/cadet-publications/A-CR-CCP-601-PF-001/A-CR-CCP-601-PF-001.pdf.
Verify against the official publication.

Number of participants / teams	Next highest power of 2	Calculation	Number of byes
2	Power of 2, so there are no byes.		
3	4	4 - 3 = 1	1
4	Power of 2, so there are no byes.		
5	8	8 - 5 = 3	3
6	8	8 - 6 = 2	2
7	8	8 - 7 = 1	1
8	Power of 2, so there are no byes.		
9	16	16 - 9 = 7	7
10	16	16 - 10 =6	6
11	16	16 - 11 = 5	5
12	16	16 - 12 = 4	4
13	16	16- 13 = 3	3
14	16	16 - 14 = 2	2
15	16	16 - 15 = 1	1
16	Power of 2, so there are no byes.		
17	32	32 - 17 = 15	15
18	32	32 - 18 = 14	14
19	32	32 - 19 = 13	13
20	32	32 - 20 = 12	12
21	32	32 - 21 = 11	11
22	32	32 - 22 = 0	10
23	32	32 - 23 = 9	9
24	32	32 - 24 = 8	8
25	32	32 - 25 = 7	7
26	32	32 - 26 = 6	6
27	32	32 - 27 = 5	5
28	32	32 - 28 = 4	4
29	32	32 - 29 = 3	3
30	32	32 - 30 = 2	2
31	32	32 - 31 = 1	1
32	Power of 2, so there are no byes.		

Note. Created by Director Cadets 3, 2008, Ottawa, ON: Department of National Defence.

Figure D-1 Byes Required in a Single or Double Elimination Tournament

Unofficial convenience copy of A-CR-CCP-601/PF-001, cached 2026-11-08 from https://app.cadets.gc.ca/cadet-publications/A-CR-CCP-601-PF-001/A-CR-CCP-601-PF-001.pdf.
Verify against the official publication.

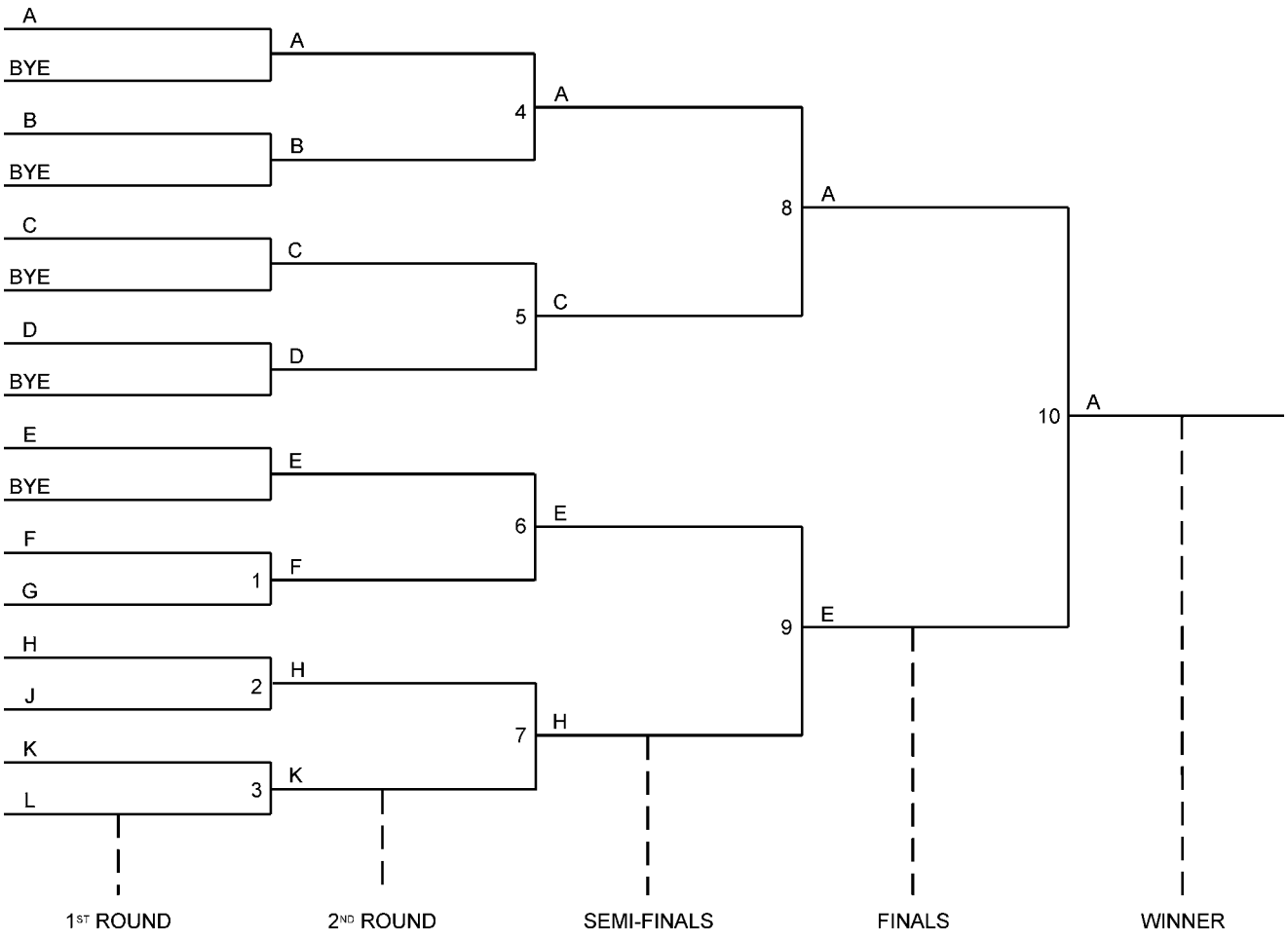

NOTES:

1. For eleven entries there are ten games (11-1) and five byes (16-11).
2. Letters denote advancing teams.
3. Numerals denote the order in which the games are played.

Note. From Physical Fitness Training in the Canadian Forces (Vol. 2) (p. 4-40) by Directorate of Physical Education, Recreation and Amenities, 1989, Ottawa, ON: Department of National Defence.

Figure D-2 Single Elimination Draw

Unofficial convenience copy of A-CR-CCP-601/PF-001, cached 2026-11-08 from https://app.cadets.gc.ca/cadet-publications/A-CR-CCP-601-PF-001/A-CR-CCP-601-PF-001.pdf.
Verify against the official publication.

THIS PAGE INTENTIONALLY LEFT BLANK

Unofficial convenience copy of A-CR-CCP-601/PF-001, cached 2026-11-08 from https://app.cadets.gc.ca/cadet-publications/A-CR-CCP-601-PF-001/A-CR-CCP-601-PF-001.pdf.
Verify against the official publication.

DOUBLE ELIMINATION TOURNAMENT

Recommended Use for a Double Elimination Tournament

This is very similar to the single elimination tournament with the major difference being that each participant / team must lose two games before being eliminated. This means that the tournament takes more time to conduct.

After their first loss, the participant / team is transferred to the left side of the bracket, where they are eliminated after the second defeat. In the finals, the winner of the left side (loser's bracket) meets the winner of the right side (winner's bracket). If the winner of the loser's bracket should defeat the winner of the winner's bracket, an additional game is required. After the completion of the second game, the participant / team that has suffered two defeats is eliminated and the other participant / team is declared the winner.

Sample Draws

The maximum number of games to be played is equal to double the number of entries minus one. If there are 12 teams or participants, 23 games would be the maximum number of games to be played (12 x 2 - 1 = 24 - 1 = 23).

A double elimination tournament is not advisable when more than 10 teams are part of the event. The winner on the loser's side would be involved in too many games before the championship can be decided.

Seeded Players

If seeded players are competing, they should be placed in each section of the draw so that they may be expected to reach quarter or semifinals without meeting a seeded player. The remaining positions can be drawn randomly out of a hat.

Byes

If the number of entries is not a perfect power of 2, byes will be required.

All byes must be given in the first series so that the number of entries remaining in the subsequent series is always a power of 2. The byes should be divided evenly between the top and bottom halves.

Unofficial convenience copy of A-CR-CCP-601/PF-001, cached 2026-11-08 from https://app.cadets.gc.ca/cadet-publications/A-CR-CCP-601-PF-001/A-CR-CCP-601-PF-001.pdf.
Verify against the official publication.

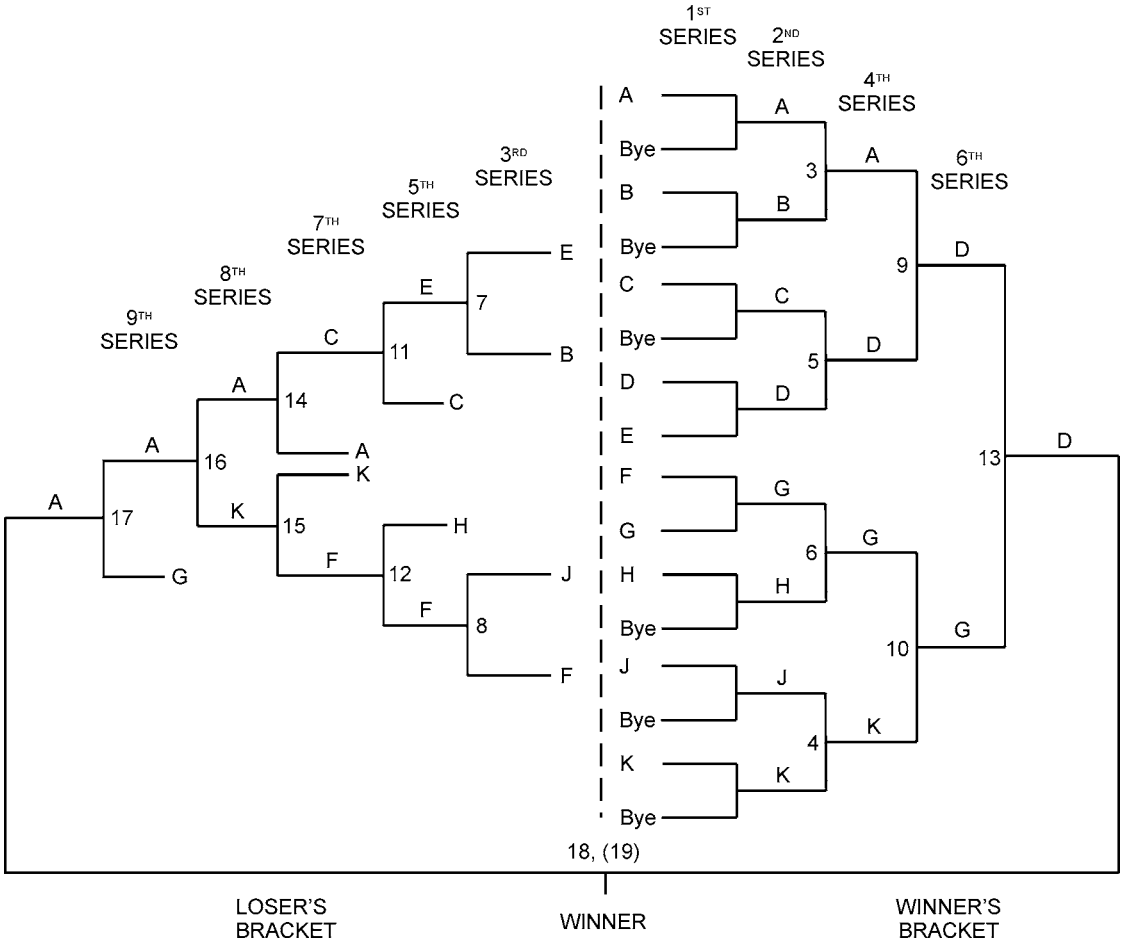

Note. From Physical Fitness Training in the Canadian Forces (Vol. 2) (p. 4-40) by Directorate of Physical Education, Recreation and Amenities, 1989, Ottawa, ON: Department of National Defence.

Figure E-1 Double Elimination Draw

Unofficial convenience copy of A-CR-CCP-601/PF-001, cached 2026-11-08 from https://app.cadets.gc.ca/cadet-publications/A-CR-CCP-601-PF-001/A-CR-CCP-601-PF-001.pdf.
Verify against the official publication.