ROYAL CANADIAN SEA CADETS

PHASE THREE

INSTRUCTIONAL GUIDE

SECTION 2

EO C323.01 – COMMUNICATE USING FLAGS AND PENNANTS

Total Time: 120 min

PREPARATION

PRE-LESSON INSTRUCTIONS

Resources needed for the delivery of this lesson are listed in the lesson specification located in A-CR-CCP-603/PG-001, Chapter 4. Specific uses for said resources are identified throughout the instructional guide within the TP for which they are required.

Review the lesson content and become familiar with the material prior to delivering the lesson.

Make five colour copies of the flag flash cards located at Annex F. Cut out and paste the flag flash cards onto card stock or heavy paper.

Photocopy and cut out the flag flash card results sheet located at Annex G for each group of five cadets.

Photocopy the signal mast handout located at Annex H for each cadet.

Photocopy two sets of the signal hoist cue cards located at Annex I. Cut out and paste them onto card stock or heavy paper.

Photocopy two signal hoist results sheet located at Annex J.

Photocopy the signal hoist answer key located at Annex K.

PRE-LESSON ASSIGNMENT

N/A.

APPROACH

An interactive lecture was chosen for TPs 1, 2, 4 and 5 to introduce the flags and pennants commonly used in sea cadet training.

An in-class activity was chosen for TPs 3 and 6 as it is an interactive way to confirm the cadets' knowledge of flags and pennants.

INTRODUCTION

REVIEW

N/A.

Unofficial convenience copy of A-CR-CCP-603/PF-001, cached 2026-11-08 from https://app.cadets.gc.ca/cadet-publications/A-CR-CCP-603-PF-001/A-CR-CCP-603-PF-001.pdf.
Verify against the official publication.

OBJECTIVES

By the end of this lesson the cadet shall have communicated a message using the given flags and pennants.

IMPORTANCE

Flags and pennants are used extensively in the nautical environment as a means of visually communicating information to the vessel's crew, shore stations and other ships that are in sight. It is important for the cadets to recognize the meanings of flags and pennants as they may be the first person at a sail centre or on-water weekend to see signals from a vessel which could indicate distress or urgent situations.

Teaching point 1 **Explain Flags and Pennants**

Time: 5 min Method: Interactive Lecture

PURPOSE

Before the invention of the radio, the only way mariners could pass messages from one ship to another was by means of visual signals. Strips of coloured cloth would be hoisted up the mast to send a predetermined signal which saved considerable time while afloat. These pieces of cloth have evolved into the distinctive shapes and patterns that make up the flags and pennants used today.

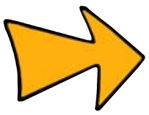

Flags, both alphabetical and numerical, are identifiable by their square shape. Flag ALPHA and BRAVO are actually burgees due to their distinctive V-shaped indentation but are referred to as flags due to their overall square shape.

Pennants are long and narrow and can be either triangular (three-sided) or quadrangular (four-sided).

In the present day, most communication between ships is accomplished electronically but flags and pennants are still used to communicate intentions, movements and general information to ships within visual range.



The meanings of the individual flags and pennants are referred to as signals or signal hoists when communicating to others.

When recording signals, the flags and pennants are written out in capital letters. Whenever possible, the abbreviation of the flag or pennant should be used.

CALL SIGN

The call sign is a combination of an alphabetical designator that denotes the type or class of ship and a series of numerals that denote the hull designation within that class. Each call sign is unique and identifies the ship to other ships within sight. When sending signals within a group of ships, the use of a call sign will designate the addressee or whom the signal is addressed to.

An example of a call sign for *Raven 56* would be PAPA FIVE SIX, where:

- *PAPA* denotes the class of vessel is a patrol craft;
- *FIVE SIX* is the hull designation that denotes hull 56 within that class; and
- Hull 56 in the patrol craft class is named *Raven 56*.

Unofficial convenience copy of A-CR-CCP-603/PF-001, cached 2026-11-08 from https://app.cadets.gc.ca/cadet-publications/A-CR-CCP-603-PF-001/A-CR-CCP-603-PF-001.pdf.
Verify against the official publication.

TACK LINE

A tack line (TACK) is a length of halyard approximately 2 m (6 feet) long; the exact length depends upon the size of flags in use. It is used:

- to avoid ambiguity by separating signals or groups of numerals on the same hoist which, if not separated, could convey a different meaning from that intended; or
- when, for the needs of a particular signal, the instructions order that a tack line be used.

An example of using a tack line is in the signal ALPHA TACK TWO where the ALPHA flag is followed by a tack line and the numerical flag TWO on the same hoist. The ALPHA flag is used to denote that friendly divers are working in the water. The addition of the tack line, followed by the numeral flag TWO denotes that the divers are working within 200 yards of the vessel. If the ALPHA flag and the TWO flag were hoisted together, they would be interpreted as another signal.

COMBINING SIGNALS

Signals may be combined together in a group to send a specific meaning that is different than the individual flag or pennant's meaning. If the signals are not to be interpreted as a group, they must be separated by a tack line or hoisted on separate halyards.

A call sign is an example of where signals can be combined on one hoist.

CONFIRMATION OF TEACHING POINT 1

QUESTIONS

Q1. What shape is a flag?

Q2. What signal is used to designate an addressee?

Q3. What must be used to separate signals on a single halyard if they are not to be interpreted as a group?

ANTICIPATED ANSWERS

A1. Square.

A2. Call sign.

A3. Tack line.

Teaching point 2 **Explain Signal Hoist Terms**

Time: 5 min Method: Interactive Lecture

SIGNAL HOIST TERMS

Bent on. The signal flag is attached to the halyard, secured to a cleat and ready to be hoisted.

Hoist. To raise the signal flag.

Close Up. The signal flag is hoisted to the full extent of the halyard with the head of the flag touching the block.

At the Dip. The signal flag is hoisted to a position one-third of the halyard length from the top.

Haul Down (Strike). To lower the signal flag and remove from the halyard.

Unofficial convenience copy of A-CR-CCP-603/PF-001, cached 2026-11-08 from https://app.cadets.gc.ca/cadet-publications/A-CR-CCP-603-PF-001/A-CR-CCP-603-PF-001.pdf.
Verify against the official publication.

CONFIRMATION OF TEACHING POINT 2

QUESTIONS

Q1. Where should a signal flag be if it is at the dip?

Q2. What is the term used for lowering a signal flag?

Q3. What does hoist mean?

ANTICIPATED ANSWERS

A1. One-third of the halyard length from the top.

A2. Haul down (strike).

A3. To raise the signal flag.

Teaching point 3 — **Conduct an Activity Where the Cadets Will Identify and Describe the Meaning of Flags and Pennants**

Time: 40 min — Method: In-Class Activity



Introduce the flags and pennants from Figure 1 and conduct the activity to confirm the cadet's recognition of them.

FLAG AND PENNANTS

There are 14 common signals used in sea cadet training (as illustrated in Figure 1). Each signal may have a military and an International Code of Signals (INTERCO) meaning. When signals are hoisted on a military ship, the military meaning is assumed unless the CODE or ANSWER pennant (ANS) is also hoisted indicating to use the INTERCO meanings.

Unofficial convenience copy of A-CR-CCP-603/PF-001, cached 2026-11-08 from https://app.cadets.gc.ca/cadet-publications/A-CR-CCP-603-PF-001/A-CR-CCP-603-PF-001.pdf.
Verify against the official publication.

Signal	Example	Meaning	SCTV Use
A **ALPHA**		Military—Divers or friendly explosive ordnance disposal personnel down. INTERCO—Diver down. Keep well clear at slow speed.	**Close Up.** Divers or friendly explosive ordnance disposal personnel down. A numeral group following will indicate the radius in hundreds of yards inside which personnel are operating. All vessels are to remain clear.
	Memory aid: Looks like a letter "A" on its side.		
B **BRAVO**		Military—Fuelling or transferring explosives or inflammable material. INTERCO—Taking in, discharging or carrying dangerous goods.	**At the Dip.** Temporarily stopped fuelling or transferring. **Close Up.** Fuel, explosives or inflammable material is being transferred.
	Memory aid: Looks like the letter "B". "B" for boom. Red means danger.		
G **GOLF**		Military—Guide. INTERCO—I require a pilot.	**Close Up.** This ship is to be the lead ship, follow me. When G TACK plus CALL SIGN is hoisted, it indicates that the ship denoted by the call sign is to be the lead ship.
	Memory aid: Grass on a golf course. Sand traps and water on a golf course.		
I **INDIA**		Military—Going alongside (in port or at anchor). INTERCO—Altering my course to port.	**SHIP GOING ALONGSIDE** **At the Dip.** I am preparing to come alongside you. **Close Up.** I am ready to come alongside you. **Hauled Down.** First line is secured.
			RECEIVING SHIP **At the Dip.** I am preparing to receive you on the side indicated. **Close Up.** I am ready to receive you on the side indicated. **Hauled Down.** First line is secured.
	Memory aid: When preparing to tie, remember to dot your "i".		

Director Cadets 3, 2008, Ottawa, ON: Department of National DefenceDirector Cadets 3, 2008, Ottawa, ON: Department of National DefenceDirector Cadets 3, 2008, Ottawa, ON: Department of National Defence

Figure 1 (Sheet 1 of 3) Common Flags and Pennants

Unofficial convenience copy of A-CR-CCP-603/PF-001, cached 2026-11-08 from https://app.cadets.gc.ca/cadet-publications/A-CR-CCP-603-PF-001/A-CR-CCP-603-PF-001.pdf.
Verify against the official publication.

Signal	Example	Meaning	SCTV Use
J **JULIETT**		Military—Semaphore message. INTERCO—I am on fire.	**Close Up.** My vessel is on fire. Keep well clear. The INTERCO meaning is assumed on an Sea Cadet Training Vessel and is used here without hoisting ANS.
	Memory aid: White hot, need lots of water.		
O **OSCAR**		Military—Man overboard. INTERCO—Man overboard.	**Close Up.** Man overboard.
	Memory aid: Yellow and red will flash, after you hear the splash.		
P **PAPA**		Military—General recall. INTERCO—Recall. Vessel about to sail.	**Close Up.** All personnel belonging to this ship must return immediately.
	Memory aid: White on blue, the boat will sail without you.		
Q **QUEBEC**		Military—Boat recall. INTERCO—Vessel is healthy. Request free practique (ability to manoeuvre).	**Close Up.** All boats belonging to this ship must return immediately. (Used by vessels entering a foreign port to denote that they are healthy but have not cleared through customs or immigration).
	Memory aid: When flying quebec, all boats back on deck.		
U **UNIFORM**		Military—Anchoring. INTERCO—You are running into danger.	**At the Dip.** Anchor let go, veering cable. **Close Up.** Cable veered, working cable. **Hauled Down.** Ship has her anchor.
		Military—Mooring.	**At the Dip.** Mooring cable let go. **Close Up.** Cable middled. **Hauled down.** Cable secured.
		Military—Weighing.	**At the Dip.** Heaving in anchor cable. **Close Up.** Anchor aweigh. **Hauled Down.** I am ready to proceed.
	Memory aid: With the red and white, the anchor takes a bite.		

Director Cadets 3, 2008, Ottawa, ON: Department of National DefenceDirector Cadets 3, 2008, Ottawa, ON: Department of National DefenceDirector Cadets 3, 2008, Ottawa, ON: Department of National Defence

Figure 1 (Sheet 2 of 3) Common Flags and Pennants

14-C323.01-6

Unofficial convenience copy of A-CR-CCP-603/PF-001, cached 2026-11-08 from https://app.cadets.gc.ca/cadet-publications/A-CR-CCP-603-PF-001/A-CR-CCP-603-PF-001.pdf.
Verify against the official publication.

Signal	Example	Meaning	SCTV Use
X **X-RAY**		Military—Exercising. INTERCO—Stop carrying out your intentions and watch for my signals.	**Close Up.** Exercises completed. When X TACK (signal) is hoisted, it indicates that the meaning denoted by the signal is being exercised. For simplicity, the tack line may be left out.
	Memory aid: Exercise avast when x-ray is on the mast.		
Z **ZULU**		Military—Communication guard. INTERCO—I require a tug.	**Close Up.** I require a tug (tow). The INTERCO meaning is assumed on an SCTV and is used without hoisting ANS.
	Memory aid: When many colours flow, I need a tow.		
5 **FIVE**		Military—Breakdown. INTERCO—Numeral 5.	**Close Up.** I have a breakdown.
	Memory aid: Pieces of the flag are broken apart.		
PREPARATIVE		Military—Morning and evening ceremonies/Colours (as appropriate). INTERCO—No meaning.	**Close Up.** Five minutes until the Ceremony/Colours. **At the Dip.** Commence Ceremony/Colours. **Hauled Down.** Ceremony/Colours completed.
	Memory aid: Yellow and green, caution before go.		
3 rd **SUBSTITUTE**	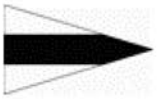	Military—Absentee indicator (CO/XO) (used in port only). INTERCO—Substitute the third flag in this hoist for this flag.	**Close Up.** Absence of the Commanding Officer (CO). Its use immediately shifts to the Executive Officer (XO) when the CO departs for a known period of time in excess of 72 hours.
	Memory aid: If the CO is gone for the night, put up the black and white.		

Director Cadets 3, 2008, Ottawa, ON: Department of National DefenceDirector Cadets 3, 2008, Ottawa, ON: Department of National DefenceDirector Cadets 3, 2008, Ottawa, ON: Department of National Defence

Figure 1 (Sheet 3 of 3) Common Flags and Pennants

Unofficial convenience copy of A-CR-CCP-603/PF-001, cached 2026-11-08 from https://app.cadets.gc.ca/cadet-publications/A-CR-CCP-603-PF-001/A-CR-CCP-603-PF-001.pdf.
Verify against the official publication.

ACTIVITY

Time: 20 min

OBJECTIVE

The objective of this activity is to have the cadets practice flag recognition skills.

RESOURCES

- Flag flash cards located at Annex F (five sets),
- Flash card results sheet located at Annex G (one per cadet), and
- Five small tables.

ACTIVITY LAYOUT



This activity can be scaled down to accommodate a smaller class size by setting up fewer stations.

1. Set up tables in an area large enough to accommodate all of the cadets (as illustrated in Figure 2).

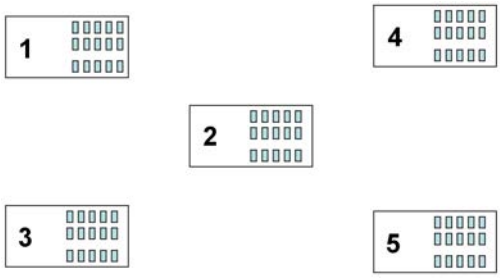

Director Cadets 3, 2007, Ottawa, ON: Department of National Defence

Figure 2 Layout for Flag Flash Card Activity

2. Lay a set of flag flash cards face down on each table.

ACTIVITY INSTRUCTIONS

1. Brief the cadets on the rules of the activity, to include:
   a. No talking unless asking a question.
   b. No signalling to other players.
   c. Questions must have yes or no answers.
   d. Questions must be asked to one other cadet only.
   e. Only one question or guess per turn.
   f. Cards must be visible to other players at all times.
2. Divide the cadets into five equal groups, not to exceed 10 cadets per group.

Unofficial convenience copy of A-CR-CCP-603/PF-001, cached 2026-11-08 from https://app.cadets.gc.ca/cadet-publications/A-CR-CCP-603-PF-001/A-CR-CCP-603-PF-001.pdf.
Verify against the official publication.

3. Have each group stand around a table.

4. Select a cadet from each table that will start the round.

5. Give each cadet a results sheet.

6. On the word “Go”, all cadets will pick up a card from the table without looking at it and hold it on the forehead with one finger.

7. The cadet designated to start the round will ask one other cadet in the group a question about the card they hold.

8. Play continues with the cadet on the right, who may ask a question or guess at the card they hold.

9. If a cadet’s guess is incorrect, they will place the card face down on the table and pick up another card. If the cadet’s guess is correct, they will place the card face down on the table and record a check mark on the results sheet. That cadet will proceed to another table, pick up another card and continue playing. Play at the previous table will continue with the cadet on the right of the space just vacated.

10. The activity continues around the tables until all cadets have five check marks.

SAFETY

N/A.

CONFIRMATION OF TEACHING POINT 3

The cadets’ participation in the activity will serve as the confirmation of this TP.

Teaching point 4 **Identify the Parts of a Signal Mast**

Time: 5 min Method: Interactive Lecture

PARTS OF A SIGNAL MAST



Distribute the signal mast handout located at Annex H to the cadets.

Identify the parts on an actual signal mast (as illustrated in Figure 3). If a signal mast is not available, identify the parts using the signal mast handout located at Annex H.

Mast. A long, upright pole erected on a vessel or shore.

Masthead (Truck). Top portion of a mast.

Yard. The horizontal spars fitted on a mast to carry sails, rigging or signals.

Gaff. A spar projecting aft from the mast and angled up at approximately 45 degrees.

Halyard. The line which raises or lowers a signal flag.

Unofficial convenience copy of A-CR-CCP-603/PF-001, cached 2026-11-08 from https://app.cadets.gc.ca/cadet-publications/A-CR-CCP-603-PF-001/A-CR-CCP-603-PF-001.pdf.
Verify against the official publication.

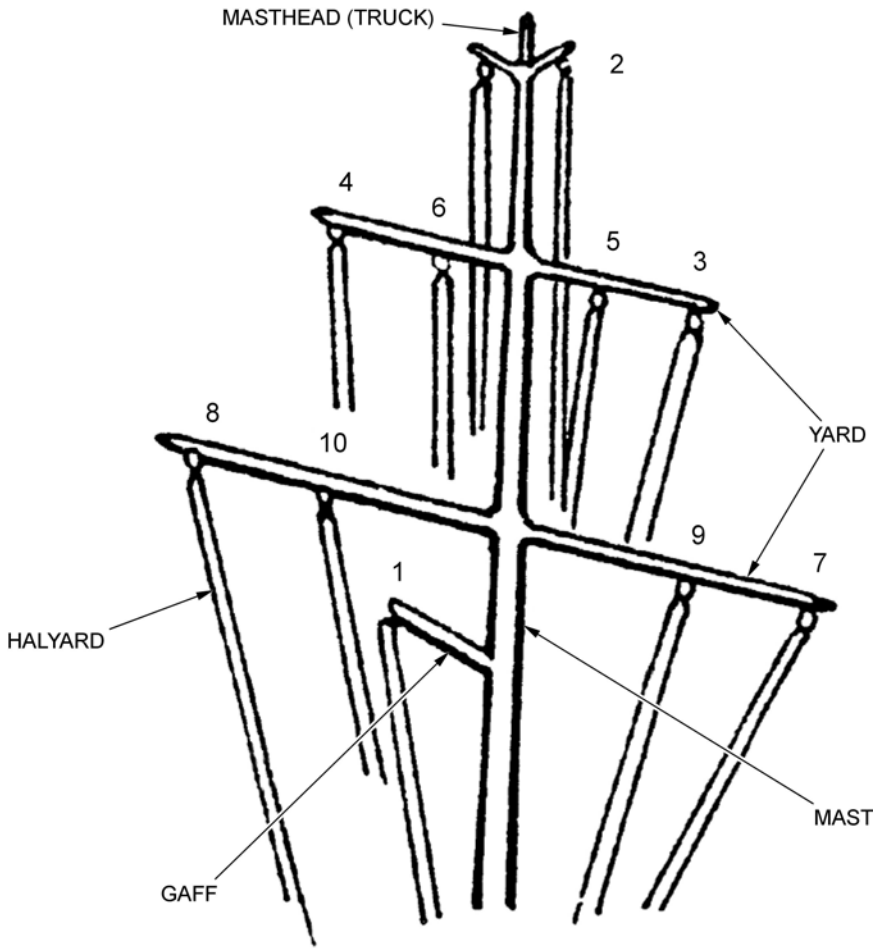

Chief of Maritime Staff/Staff Officer Heritage, Manual of Ceremony for HMC Ships, Submarines and Naval Reserve Divisions, Department of National Defence (p. 2A-3)

Figure 3 Parts of a Signal Mast and Superior Positions

CONFIRMATION OF TEACHING POINT 4

QUESTIONS

Q1. What is the top of the mast called?

Q2. What are the horizontal spars on a mast called?

Q3. What is a halyard used for?

ANTICIPATED ANSWERS

A1. Masthead (truck).

A2. Yards.

A3. To raise or lower a signal flag.

Unofficial convenience copy of A-CR-CCP-603/PF-001, cached 2026-11-08 from https://app.cadets.gc.ca/cadet-publications/A-CR-CCP-603-PF-001/A-CR-CCP-603-PF-001.pdf.
Verify against the official publication.

Teaching point 5 **Identify the Superior Positions on a Signal Mast**

Time: 5 min Method: Interactive Lecture

SUPERIOR POSITIONS



Identify the superior positions on an actual signal mast (as illustrated in Figure 3). If a signal mast is not available, identify the positions using the signal mast handout located at Annex H.

Flags of a single hoist are to be read from the top down and adjacent hoists are to be read from the outboard to inboard or from forward to aft. When two flag hoists are flying simultaneously, the one to be read first is said to be in a “superior” position. Conversely, a flag hoist which is to be read after another is referred to as being in an “inferior” position.

On a signal mast, the superior position is the gaff, if fitted, followed by the masthead (truck). On a yard, the signals are read from the outer halyards first and then the inner halyards starting with the starboard side (as illustrated in Figure 3).

CONFIRMATION OF TEACHING POINT 5

QUESTIONS

Q1. What position on a signal mast is superior to the masthead (truck) position?

Q2. Which side of a yard is the superior side?

Q3. What does it mean when a signal is in a superior position?

ANTICIPATED ANSWERS

A1. The gaff position, if fitted.

A2. Starboard side.

A3. It is to be read before other signals.

Teaching point 6 **Conduct Activities Where the Cadets Will Communicate Using Flags And Pennants**

Time: 50 min Method: In-Class Activity



The activities in this TP offer the cadets the opportunity to practice signal hoist skills previously learned in this lesson.

Unofficial convenience copy of A-CR-CCP-603/PF-001, cached 2026-11-08 from https://app.cadets.gc.ca/cadet-publications/A-CR-CCP-603-PF-001/A-CR-CCP-603-PF-001.pdf.
Verify against the official publication.

ACTIVITY 1

Time: 30 min

OBJECTIVE

The objective of this activity is to have the cadets practice signal hoist skills.

RESOURCES

- Flags and pennants (two sets), to include:
  - alpha,
  - bravo,
  - golf,
  - india,
  - juliet,
  - oscar,
  - papa,
  - quebec,
  - uniform,
  - x-ray,
  - zulu,
  - flag ’5’,
  - preparative, and
  - 3rd substitute;
- One-metre tack lines (two),
- Signal masts or halyards (two),
- Signal hoist cue cards located at Annex I (two sets),
- Signal hoist results sheet located at Annex J (two), and
- Signal hoist answer key located at Annex K (two).

ACTIVITY LAYOUT

The instructor will set up two tables beside the signal masts with one set of cue cards on each table (as illustrated in Figure 4).

Unofficial convenience copy of A-CR-CCP-603/PF-001, cached 2026-11-08 from https://app.cadets.gc.ca/cadet-publications/A-CR-CCP-603-PF-001/A-CR-CCP-603-PF-001.pdf.
Verify against the official publication.

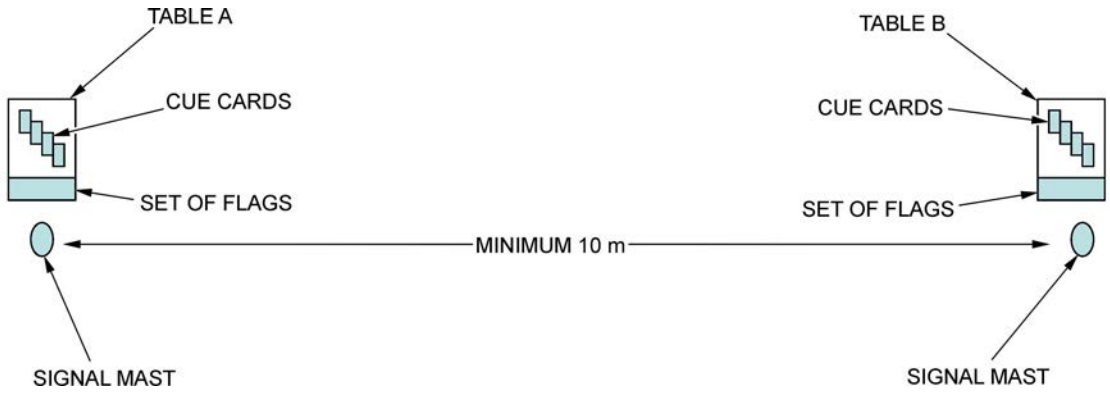

Director Cadets 3, 2007, Ottawa, ON: Department of National Defence

Figure 4 Layout for Flag Hoist Activity

ACTIVITY INSTRUCTIONS

1. Brief the cadets on the rules of the activity, to include:
   a. Each cadet has 30 seconds to complete the hoist as indicated on the cue card before the team can assist.
   b. Each team has 30 seconds from the time the cadet requests assistance to complete the hoist as indicated on the cue card.
   c. Ten points are awarded for a correct, unassisted hoist.
   d. Five points are awarded for a correct, team-assisted hoist.
   e. Ten points are awarded for a correctly decoded signal.
   f. No discussion is allowed until assistance is requested.
2. Divide the cadets into two equal groups.
3. Decide which team will go first.
4. One cadet from the team will select a cue card and proceed to hoist the signals as indicated on the card. If they are unsure as to the correct hoist, they may ask another cadet on the team for assistance in hoisting the correct signal.
5. The opposite team will decode the signal and record the results on the results sheet.
6. Teams will alternate sending and receiving until all cadets have had a turn hoisting a signal.
7. Debrief the cadets on the results before continuing on to the next activity.

SAFETY

N/A.

ACTIVITY 2

Time: 20 min

OBJECTIVE

The objective of this activity is to have the cadets practice signal flag recognition skills.

14-C323.01-13

Unofficial convenience copy of A-CR-CCP-603/PF-001, cached 2026-11-08 from https://app.cadets.gc.ca/cadet-publications/A-CR-CCP-603-PF-001/A-CR-CCP-603-PF-001.pdf.
Verify against the official publication.

RESOURCES

- Flags and pennants, to include:
  - alpha,
  - bravo,
  - golf,
  - india,
  - juliet,
  - oscar,
  - papa,
  - quebec,
  - uniform,
  - x-ray,
  - zulu,
  - flag ’5’,
  - preparative, and
  - 3rd substitute; and
- Large sack/bag.

ACTIVITY LAYOUT

The instructor will place all the flags and pennants in the large sack.

ACTIVITY INSTRUCTIONS

1. Brief the cadets on the rules of the activity, to include:
   a. Pick only one flag from the sack.
   b. Each cadet has 15 seconds to identify the flag.
   c. The cadets will continue the activity until they correctly identify a picked flag.
2. Have the cadets line up in three lines around the sack.
3. Each cadet reaches into the sack, picks one flag and identifies which flag it is.
4. The flag is placed back into the bag.
5. The activity will continue until all cadets have picked a flag and correctly identified it.
6. Debrief the cadets on the results observed in the activity.

SAFETY

N/A.

Unofficial convenience copy of A-CR-CCP-603/PF-001, cached 2026-11-08 from https://app.cadets.gc.ca/cadet-publications/A-CR-CCP-603-PF-001/A-CR-CCP-603-PF-001.pdf.
Verify against the official publication.

CONFIRMATION OF TEACHING POINT 6

The cadets' participation in the activities will serve as the confirmation of this TP.

END OF LESSON CONFIRMATION

The cadets' participation in the activities in TP 6 will serve as the confirmation of this lesson.

CONCLUSION

HOMEWORK/READING/PRACTICE

N/A.

METHOD OF EVALUATION

N/A.

CLOSING STATEMENT

Flags and pennants are used extensively in the nautical environment as a means of visually communicating information to the vessel's crew, shore stations and other ships that are in sight. It is important to understand how to communicate using flags and pennants as the cadets may be required to receive signals from a vessel which could indicate distress or urgent situations at a sail centre or on-water weekend.

INSTRUCTOR NOTES/REMARKS

This lesson may be taught in four periods during a weekend training day or four periods over two training nights consisting of TPs 1–4 on the first night and TPs 5 and 6 on the second night.

If time permits, the cadets can qualify for the *Sea Cadet Flag and Pennant Certificate*. This can be achieved by identifying and describing the meaning of all flags and pennants used by the Canadian Navy with an accuracy of 80 percent and reciting the phonetic alphabet with an accuracy of 90 percent. Remaining flags and pennants can be found in reference A1-020 (pp. 2-1 to 2-12).

REFERENCES

A1-002 Chief of Maritime Staff/Staff Officer Heritage. (2004). *Manual of Ceremony for HMC Ships, Submarines and Naval Reserve Divisions*. Ottawa, ON: Department of National Defence.

A1-004 B-GN-181-105/FP-E00 Chief of the Maritime Staff. (2000). *CFCD 105 Fleet Seamanship Rigging and Procedures Manual*. Ottawa, ON: Department of National Defence.

A1-020 North American Treaty Organization. (2003). MTP 1(D), *Multinational Maritime Tactical Signal and Manoeuvring Book* (Vol. 2). Washington, DC: Custodian North American Treaty Organization Standardization Agency.

Unofficial convenience copy of A-CR-CCP-603/PF-001, cached 2026-11-08 from https://app.cadets.gc.ca/cadet-publications/A-CR-CCP-603-PF-001/A-CR-CCP-603-PF-001.pdf.
Verify against the official publication.

THIS PAGE INTENTIONALLY LEFT BLANK

Unofficial convenience copy of A-CR-CCP-603/PF-001, cached 2026-11-08 from https://app.cadets.gc.ca/cadet-publications/A-CR-CCP-603-PF-001/A-CR-CCP-603-PF-001.pdf.
Verify against the official publication.