ROYAL CANADIAN SEA CADETS

PHASE THREE

INSTRUCTIONAL GUIDE

SECTION 4

EO C321.03 – RIG A GYN

Total Time: 150 min

PREPARATION

PRE-LESSON INSTRUCTIONS

Resources needed for the delivery of this lesson are listed in the lesson specification located in A-CR-CCP-603/PG-001, Chapter 4. Specific uses for said resources are identified throughout the instructional guide within the TP for which they are required.

Review the lesson content and become familiar with the material prior to delivering the lesson.

Photocopy and cut out the parts cards located at Annex I.

Photocopy the blank gyn diagram located at Annex J, the sequence for Station 3 located at Annex K and the gyn scoresheet located at Annex L.

Ensure that the cadets have their issued cadet boots with them.

PRE-LESSON ASSIGNMENT

N/A.

APPROACH

An interactive lecture was chosen for TPs 1–3 to illustrate the function, parts and rigging commands for a gyn.

Demonstration and performance was chosen for TPs 4 and 6 as it provides the instructor the opportunity to introduce a gyn, demonstrate procedures and observe the cadets rigging and de-rigging a gyn.

A practical activity was chosen for TP 5 as it is an interactive way to introduce the cadets to operating a gyn in a safe and controlled environment. This activity contributes to the development of seamanship skills and knowledge in a fun and challenging setting.

INTRODUCTION

REVIEW

Review safe practices, personal safety equipment and gyn danger zones from EO M321.01 (Describe Safety Procedures for Operating Lifting Devices, Section 1).

OBJECTIVES

By the end of this lesson the cadet, as a member of a group, shall have rigged, operated and de-rigged a gyn.

Unofficial convenience copy of A-CR-CCP-603/PF-001, cached 2026-11-08 from https://app.cadets.gc.ca/cadet-publications/A-CR-CCP-603-PF-001/A-CR-CCP-603-PF-001.pdf.
Verify against the official publication.

IMPORTANCE

It is important for cadets to rig a gyn as it introduces them to sea activities of the Canadian Forces while stimulating an interest in seamanship specialty training. Although the gyn is no longer used regularly by the Canadian Navy, it is a great way to foster teamwork and practice seamanship skills.

Teaching point 1 **Explain the Function of a Gyn**

Time: 5 min Method: Interactive Lecture

GYN

Due to improvements in technology, improvised lifting devices are not as widely used today as in the past. However, when no suitable crane or hydraulic device is available on board or ashore for lifting a heavy object or equipment, some form of an improvised lifting device must be rigged. This may include, sheers, a standing or swinging derrick, or a gyn.

A gyn is the strongest of these types of improvised lifting devices and requires no additional rigging to support it. It is used for straight lifts only.

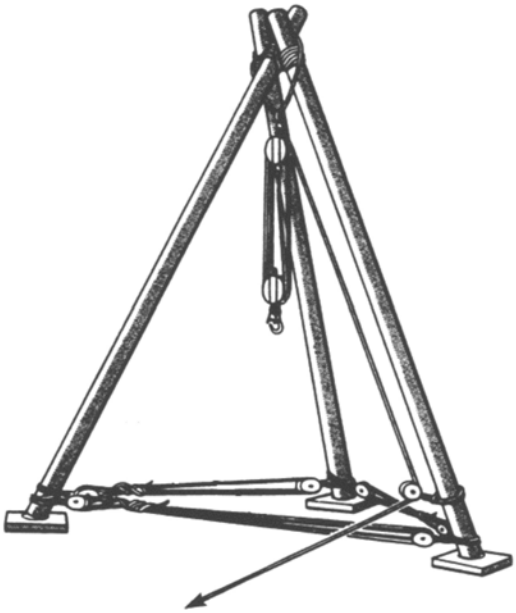

Royal Navy, Admiralty Manual of Seamanship 1967 (Vol. 2), Her Majesty's Stationery Office (p. 198)

Figure 1 Assembled Gyn

CONFIRMATION OF TEACHING POINT 1

QUESTIONS

Q1. What is the strongest type of improvised lifting device?

Q2. When is a gyn used?

Q3. For what type of lift is a gyn used?

Unofficial convenience copy of A-CR-CCP-603/PF-001, cached 2026-11-08 from https://app.cadets.gc.ca/cadet-publications/A-CR-CCP-603-PF-001/A-CR-CCP-603-PF-001.pdf.
Verify against the official publication.

ANTICIPATED ANSWERS

A1. Gyn.

A2. When no suitable crane or hydraulic device is available on board or ashore for lifting a heavy object or equipment.

A3. Straight lifts.

Teaching point 2 **Identify the Parts of a Gyn**

Time: 15 min Method: Interactive Lecture

PARTS OF A GYN

Head Lashing. The head lashing forms the head of the gyn. The spars are lashed together to form a tripod using six to eight figure-of-eight turns.

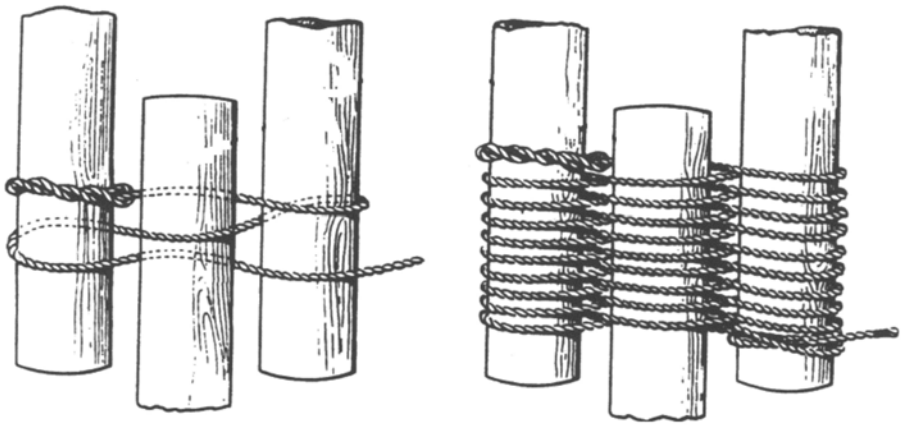

Royal Navy, Admiralty Manual of Seamanship 1967 (Vol. 2), Her Majesty's Stationery Office (p. 207)

Figure 2 Head Lashing

Spars. Spars are the basis of the tripod, acting as the legs of the gyn. There are three spars used in the rigging of the gyn. The heads of the spars are lashed together with a head lashing to connect them. When applying the head lashing, the spars are laid out parallel with the centre spar – the prypole – in the opposite direction from the other spars – the cheeks.

Unofficial convenience copy of A-CR-CCP-603/PF-001, cached 2026-11-08 from https://app.cadets.gc.ca/cadet-publications/A-CR-CCP-603-PF-001/A-CR-CCP-603-PF-001.pdf.
Verify against the official publication.

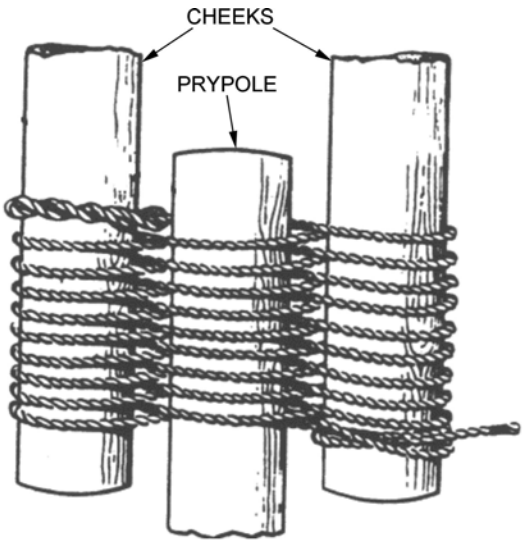

Royal Navy, Admiralty Manual of Seamanship 1967 (Vol. 2), Her Majesty's Stationery Office (p. 207)

Figure 3 Spars

Main Purchase. The main purchase, consisting of a two-fold purchase, is attached to the head of the spars and is used to lift the load (as illustrated in Figure 4).

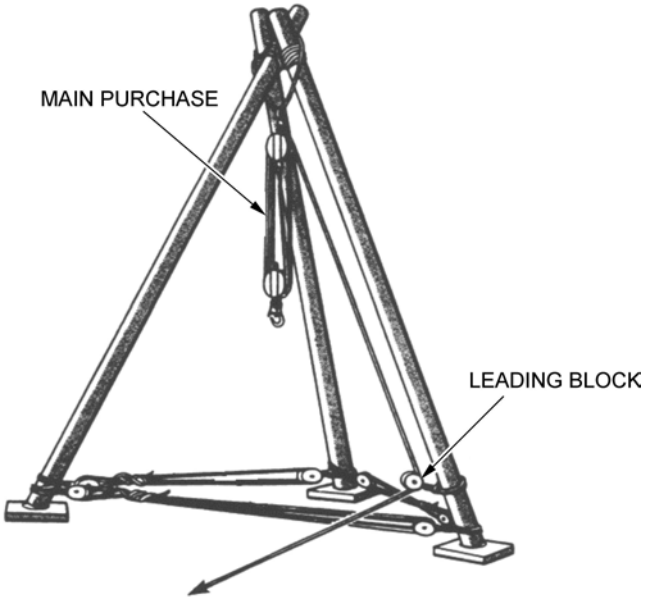

Royal Navy, Admiralty Manual of Seamanship 1967 (Vol. 2), Her Majesty's Stationery Office (p. 198)

Figure 4 Main Purchase and Shoes

Strops. Strops are a continuous loop in a line or wire rope. They are used to pass around a cask, spar, piece of line, etc to provide an eye to be placed over a hook or shackle (as illustrated in Figure 5).

Unofficial convenience copy of A-CR-CCP-603/PF-001, cached 2026-11-08 from https://app.cadets.gc.ca/cadet-publications/A-CR-CCP-603-PF-001/A-CR-CCP-603-PF-001.pdf.
Verify against the official publication.

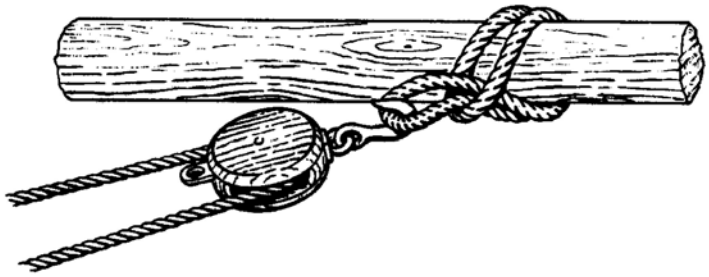

Royal Navy, Admiralty Manual of Seamanship 1964 (Vol. 1), Her Majesty's Stationery Office (p. 193)

Figure 5 Strop on a Spar

Leading Block (for the Fall of the Main Purchase). The leading block is secured to one of the spars and the hauling part, or fall of the main purchase is led through it (as illustrated in Figure 4). This block is used to change the direction of pull on the fall.



The fall of the main purchase refers to its hauling part which exits the standing block attached to the head of the gyn. The fall must be heaved in, in a downward motion, directly under the spars. The leading block allows the line to be safely heaved in from the side of the gyn.

Splay Tackles. The splay tackles, consisting of luffs, are rigged between each leg to prevent the legs from splaying – moving further apart – when they are under load.

Shoes (if Fitted). Shoes are usually square slabs of hardwood with a recess in their upper surfaces to take the heels of the spars (as illustrated in Figure 6). The length of each side should not be less than four times the diameter of the spar. They are used to distribute the weight of the load and the thrust of the spar over an area of the deck. When ashore, they are used to distribute the weight so as to prevent the spar from sinking into the ground.

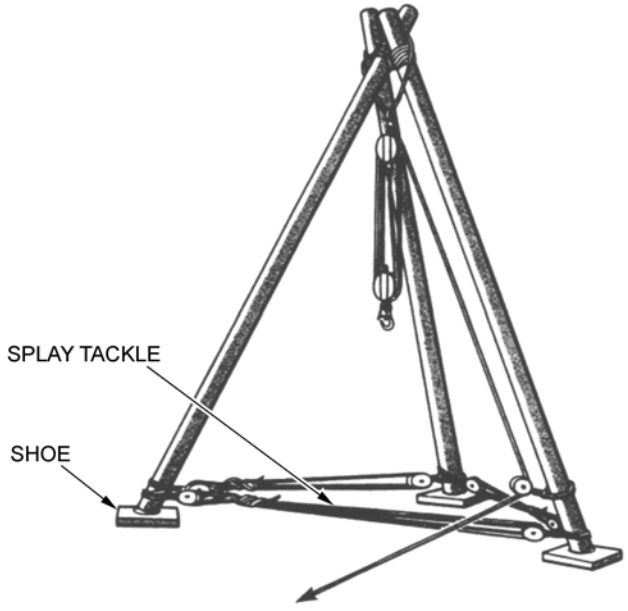

Royal Navy, Admiralty Manual of Seamanship 1967 (Vol. 2), Her Majesty's Stationery Office (p. 198)

Figure 6 Splay Tackles and Shoes

Unofficial convenience copy of A-CR-CCP-603/PF-001, cached 2026-11-08 from https://app.cadets.gc.ca/cadet-publications/A-CR-CCP-603-PF-001/A-CR-CCP-603-PF-001.pdf.
Verify against the official publication.

Thumb Pieces/Rope Collars (if Fitted). Thumb pieces/rope collars are used to prevent the strops from slipping on the spars. Thumb pieces are wooden pieces that are screwed or nailed onto the spar. Rope collars are put onto the spar like a whipping.

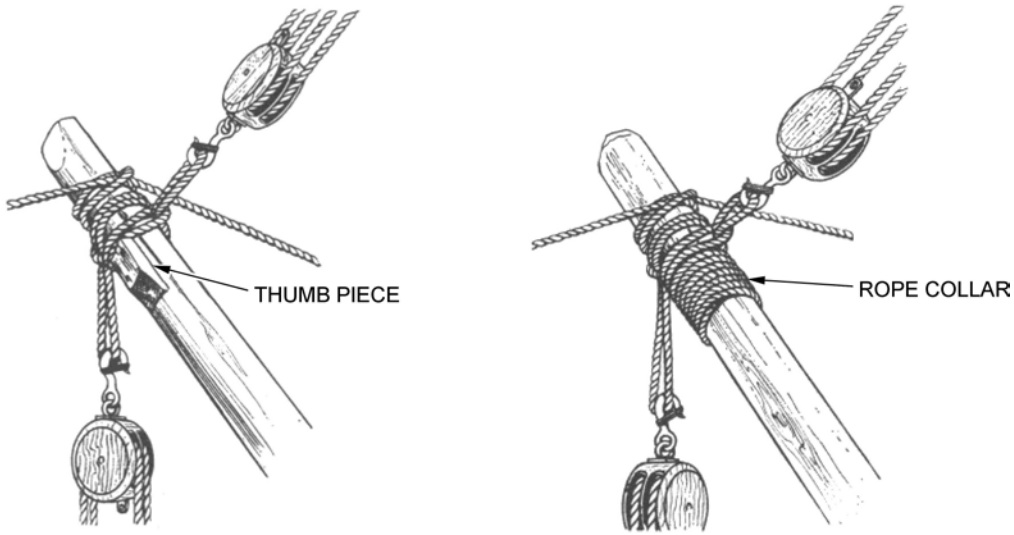

Royal Navy, Admiralty Manual of Seamanship 1967 (Vol. 2), Her Majesty's Stationery Office (p. 207)

Figure 7 Thumb piece and Rope Collar

CONFIRMATION OF TEACHING POINT 2

QUESTIONS

Q1. What are splay tackles used for?

Q2. What is the centre spar called?

Q3. What are thumb pieces/rope collars used for?

ANTICIPATED ANSWERS

A1. To prevent the legs from splaying – moving further apart – when they are under load.

A2. Prypole.

A3. To prevent the strops from slipping on the spars.

Teaching point 3 **Describe the Actions Taken in Response to Commands**

Time: 15 min Method: Interactive Lecture

Heave in. Give a strong pull together on a line.

Check Away. Ease out a line under control.

Avast. Stop.

Choke. Choke the standing block with the hauling part and secure it with two half hitches above the crown.

Secure. Make fast a line.

Unofficial convenience copy of A-CR-CCP-603/PF-001, cached 2026-11-08 from https://app.cadets.gc.ca/cadet-publications/A-CR-CCP-603-PF-001/A-CR-CCP-603-PF-001.pdf.
Verify against the official publication.

Handsomely. Slowly, carefully.

Roundly. Rapidly.

These are the most commonly used commands for working with the gyn. However, the list is not exhaustive. Other commands may be used based on unit preferences.

CONFIRMATION OF TEACHING POINT 3

QUESTIONS

Q1. What does the order HEAVE IN mean?

Q2. What order is given to make fast a line?

Q3. What does the order AVAST mean?

ANTICIPATED ANSWERS

A1. Give a strong pull together on a line.

A2. SECURE.

A3. Stop.

Teaching point 4 — **Demonstrate and Have the Cadets, as Members of a Group, Rig a Gyn**

Time: 20 min — Method: Demonstration and Performance

RIGGING A GYN



Demonstrate and have the cadets practice each step in rigging the gyn.

1. Mark the position for the head lashing on the three spars to be used for legs. Lay the spars parallel to each other, five centimetres (two inches) apart, with the heel of the centre spar – the prypole – pointing in the opposite direction from the other two spars – the cheeks (as illustrated in Figure 8).

Unofficial convenience copy of A-CR-CCP-603/PF-001, cached 2026-11-08 from https://app.cadets.gc.ca/cadet-publications/A-CR-CCP-603-PF-001/A-CR-CCP-603-PF-001.pdf.
Verify against the official publication.

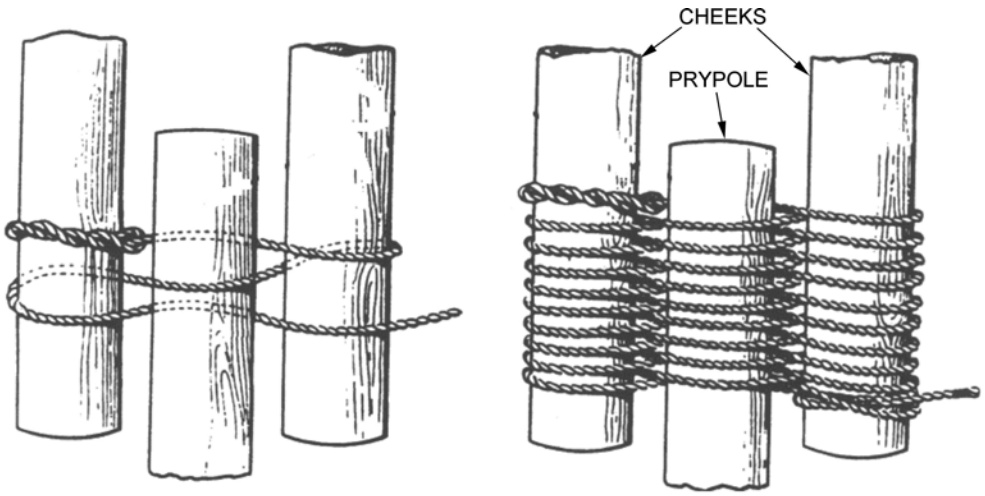

Royal Navy, Admiralty Manual of Seamanship 1967 (Vol. 2), Her Majesty's Stationery Office (p. 207)

Figure 8 Head Lashing

2. Support the heads of the spars above the deck. Start the head lashing with a timber hitch on one of the cheeks followed by six to eight figure-of-eight turns around the spars and finish with a clove hitch around the opposite cheek (as illustrated in Figure 9). Apply the lashing loose enough to allow the gyn to be raised but no so loose that it will slip once the gyn is erect.



An alternative approach to applying the head lashing is to place the three spars parallel with the heel of the prypole even with the heads of the cheeks. This allows the figure-of-eight turns to be applied easily over the ends. Once all turns are in place, the prypole is then slid back through the turns until the heads are positioned together (as illustrated in Figure 8).

3. Place a rope collar around the prypole to prevent the head lashing from slipping down the spar when raising the gyn.

4. Place the main purchase strop around the head lashing (as illustrated in Figure 9). The strop goes under the head lashing and over the tip of the prypole. The bight on each side is slipped over the tips of the cheeks. Ensure that the splice is positioned so that it will not come in contact with the hook of the block once the gyn is raised.

Unofficial convenience copy of A-CR-CCP-603/PF-001, cached 2026-11-08 from https://app.cadets.gc.ca/cadet-publications/A-CR-CCP-603-PF-001/A-CR-CCP-603-PF-001.pdf.
Verify against the official publication.

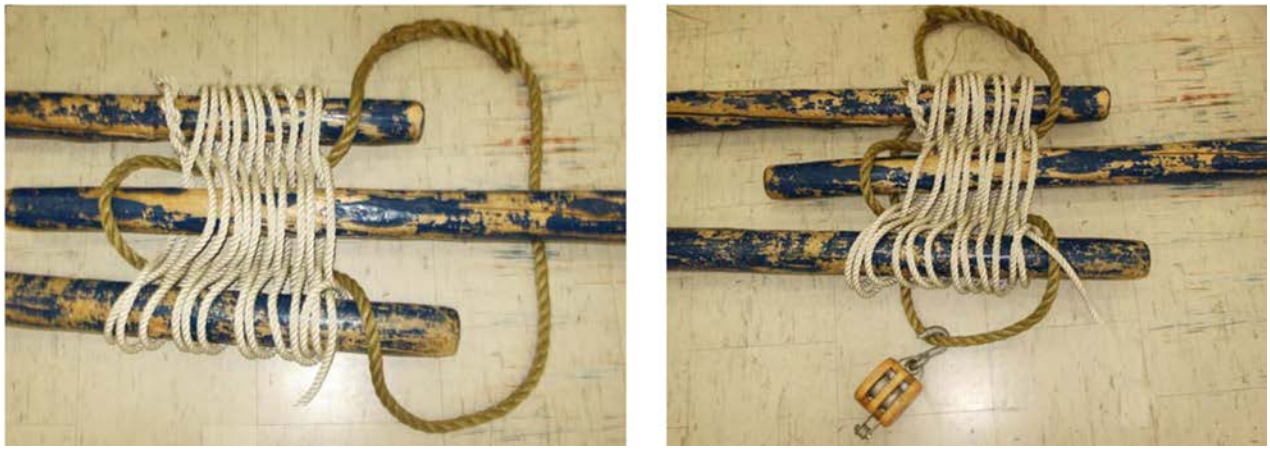

Navy League of Canada, NLP 101 Flotilla and Provincial Seamanship Competition Manual, Navy League of Canada (p. 12)

Figure 9 Head Lashing Strop

5. Rig the main purchase using a two-fold purchase (as illustrated in Figure 10). Attach the standing block to the main purchase strop (as illustrated in Figure 9). Ensure that the main purchase is rigged to disadvantage with the hauling part exiting the standing block.

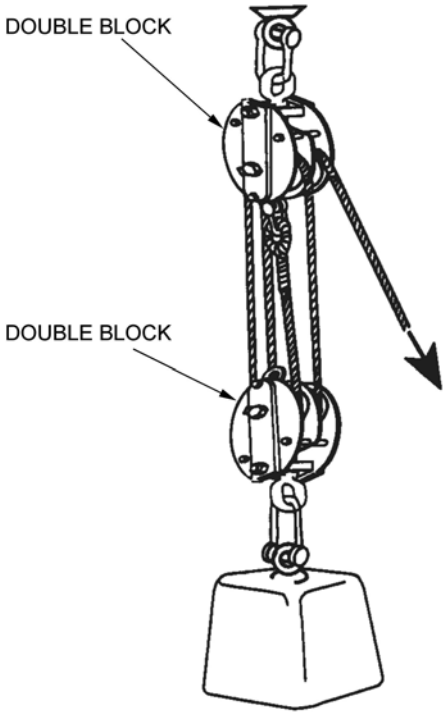

BON-050-002/PT-004 (p. 3-155)

Figure 10 Two-Fold Purchase

6. Place the splay tackle strops and the leading block strop at the feet of the spars (as illustrated in Figure 11).

The strop for the leading block may be attached above or between the splay tackle strops.

Unofficial convenience copy of A-CR-CCP-603/PF-001, cached 2026-11-08 from https://app.cadets.gc.ca/cadet-publications/A-CR-CCP-603-PF-001/A-CR-CCP-603-PF-001.pdf.
Verify against the official publication.

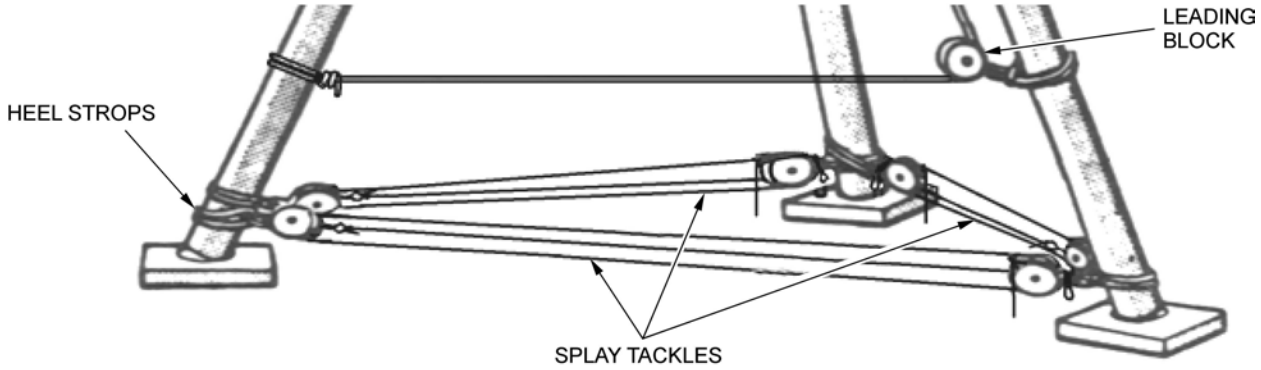

Royal Navy, Admiralty Manual of Seamanship 1964 (Vol. 1), Her Majesty's Stationery Office (p. 193)

Figure 11 Gyn Splay Tackles

7. Rig the splay tackles using luffs (as illustrated in Figure 12) and attach to the strops between the spars. Tie figure eight knots in the ends of the hauling parts.

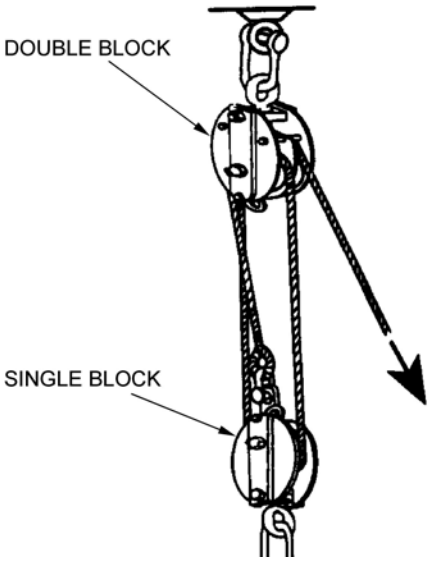

BON-050-002/PT-004 (p. 3-155)

Figure 12 Luff

8. Attach the leading block to the leading block strop and lead the fall of the main purchase through it. Tie a figure eight knot in the end of the fall.

9. Place thumb pieces/rope collars on the heels of the spars above the strops to prevent the strops from slipping up the spars.

10. Mouse all hooks (as illustrated in Figure 13).

Unofficial convenience copy of A-CR-CCP-603/PF-001, cached 2026-11-08 from https://app.cadets.gc.ca/cadet-publications/A-CR-CCP-603-PF-001/A-CR-CCP-603-PF-001.pdf.
Verify against the official publication.

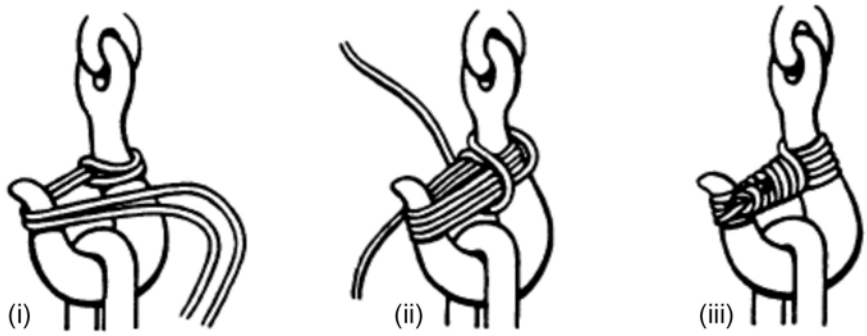

B-GN-181-105/FP-E00 (p. 5-46)

Figure 13 Mousing a Hook



Mousing is not required for blocks equipped with a safety catch on the hook. If the safety catch has been removed or the spring is missing from the catch, the block must be replaced.

11. Raise the head of the gyn to chest height. Heave in the splay tackles to pull the heels together. Continue heaving in handsomely until the distance between the heels of the gyn are approximately one-third the length of the spars used for the gyn. Choke and secure the splay tackles. Coil any excess line on the deck beside the spars.



Extreme care should be exercised here as the gyn may topple over if the splay tackles are not heaved in evenly. It is advisable to heave in splay tackles individually once the gyn nears its full height.

If the splay tackles do not heave in easily, ensure that the head lashing has not been applied too tightly.

12. The gyn is now complete and ready for operation (as illustrated in Figure 14).

Unofficial convenience copy of A-CR-CCP-603/PF-001, cached 2026-11-08 from https://app.cadets.gc.ca/cadet-publications/A-CR-CCP-603-PF-001/A-CR-CCP-603-PF-001.pdf.
Verify against the official publication.

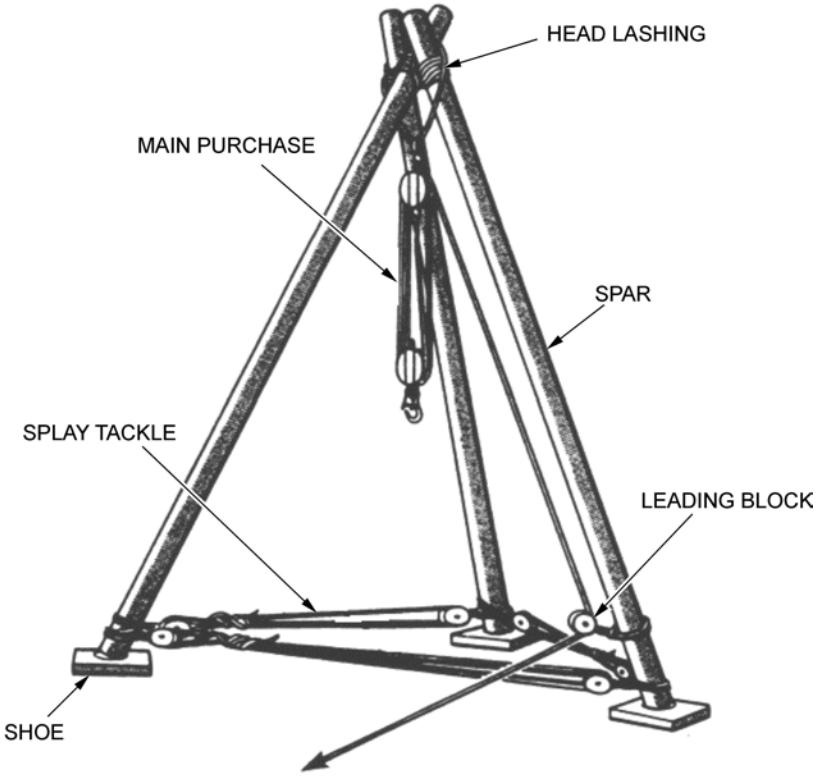

Royal Navy, Admiralty Manual of Seamanship 1967 (Vol. 2), Her Majesty's Stationery Office (p. 198)

Figure 14 Assembled Gyn

CONFIRMATION OF TEACHING POINT 4

The cadets' participation in rigging the gyn will serve as the confirmation of this TP.

Teaching point 5 **Demonstrate and Have the Cadets, as Members of a Group, Operate a Gyn**

Time: 75 min Method: Practical Activity



Demonstrate how to operate the gyn prior to starting the activity.

ACTIVITY

OBJECTIVE

The objective of this activity is to have the cadets, as members of a group, operate a gyn.

Unofficial convenience copy of A-CR-CCP-603/PF-001, cached 2026-11-08 from https://app.cadets.gc.ca/cadet-publications/A-CR-CCP-603-PF-001/A-CR-CCP-603-PF-001.pdf.
Verify against the official publication.

RESOURCES



The list of required equipment for a gyn is located in A-CR-CCP-603/PG-001, Chapter 2, Annex C, Appendix 1.

When choosing the equipment for rigging the gyn, ensure that each item is compatible with the others (e.g., the blocks are suitable for the size of the line).

- Assembled gyn,
- Load of 22 kg (50 lbs) or less,
- Whipping twine,
- Pylons,
- Hooks,
- Hard hats,
- Parts cards located at Annex I,
- Picture/model of a gyn (blank picture located at Annex J, if required),
- Sequence for station 3 located at Annex K,
- Gyn scoresheet located at Annex L,
- Whistle, and
- Stopwatch.

ACTIVITY LAYOUT

- Mark off a start area.
- Set up Station 1 with whipping twine and hooks.
- Set up Station 2 with parts cards, tape and a picture/model of a gyn.
- Set up Station 3 with a gyn, whipping twine and a load.



The gyn in Station 3 shall be fully rigged (as illustrated in Figure 14).

Unofficial convenience copy of A-CR-CCP-603/PF-001, cached 2026-11-08 from https://app.cadets.gc.ca/cadet-publications/A-CR-CCP-603-PF-001/A-CR-CCP-603-PF-001.pdf.
Verify against the official publication.

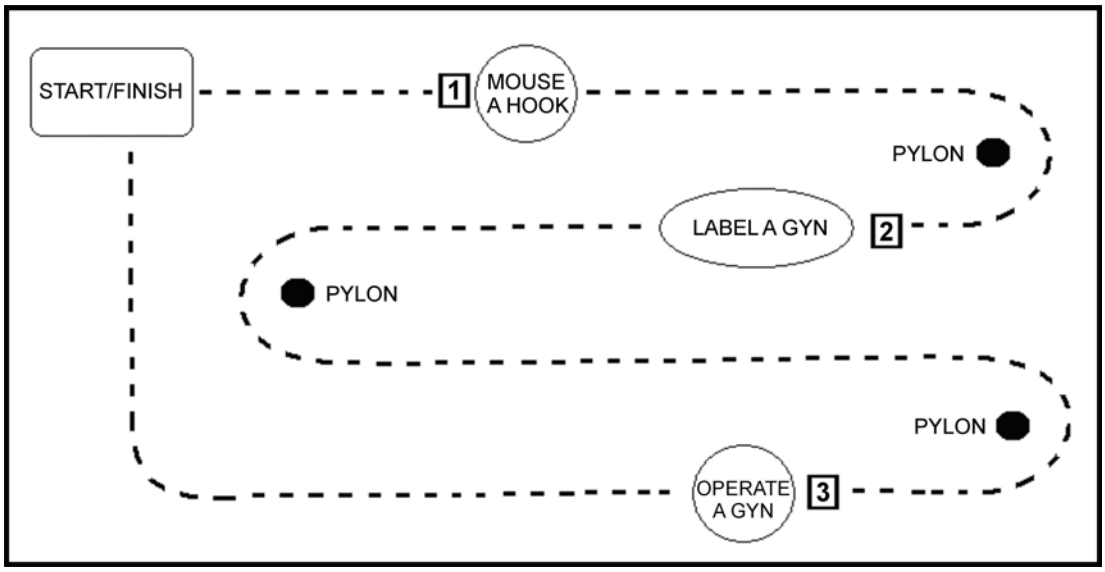

Director Cadets 3, 2007, Ottawa, ON: Department of National Defence

Figure 15 Gyn Run

ACTIVITY INSTRUCTIONS

1. Divide the cadets into groups of three.
2. Have the first group line up in the start area.
3. On the whistle signal, the group is to put on their personal safety equipment and proceed to Station 1.



Ensure the time is started on the stopwatch at the whistle signal.

4. At Station 1, have each cadet in the group mouse a hook. Check the mousings for strength. If any of the mousings come off easily, that cadet will do another mousing. Upon successfully completing the mousings, have the group proceed to Station 2.
5. At Station 2, have the group label the picture/model of the gyn and then proceed to Station 3.
6. At Station 3, stop and record the time. Have the group operate the gyn by responding to commands from Annex K as given by the instructor. Award points IAW the scoresheet found at Annex L.
7. Upon completion of Station 3, have the group continue to the finish line and tally the score.
8. Have each group complete the gyn run in the above sequence.
9. Declare the group with the most points the winner.

SAFETY

- Ensure the personal safety equipment is worn at all times.
- Ensure the cadets stay clear of the load while it is in motion.
- Ensure all hooks are moused or fitted with working safety catches.

Unofficial convenience copy of A-CR-CCP-603/PF-001, cached 2026-11-08 from https://app.cadets.gc.ca/cadet-publications/A-CR-CCP-603-PF-001/A-CR-CCP-603-PF-001.pdf.
Verify against the official publication.

CONFIRMATION OF TEACHING POINT 5

The cadets' participation in the activity will serve as the confirmation of this TP.

Teaching point 6 **Demonstrate and Have the Cadets, as Members of a Group, De-Rig a Gyn**

Time: 10 min Method: Demonstration and Performance

DE-RIG A GYN



Demonstrate and have the cadets practice each step in de-rigging the gyn.

1. Release the choke on the splay tackles, being careful not to place hands between the standing parts of the luff.

2. Check away on the splay tackles handsomely as the heels are pulled out to lower the gyn. To ensure that the gyn is lowered safely, have one cadet check away on the splay tackle and another cadet pull out each spar by hand.

3. Once the head of the gyn is at chest height, it may lowered by hand until it is resting on the deck.



The gyn is safe to de-rig once the head is resting on the ground.

4. Cut any mousings that have been applied and unhook the blocks from the strops.

5. Un-reeve the splay tackles and main purchase.

6. Remove the strops from the spars.

7. Remove the head lashing from the spars.

8. Coil all lines and secure the equipment as required.

CONFIRMATION OF TEACHING POINT 6

The cadets' participation in de-rigging a gyn will serve as the confirmation of this TP.

END OF LESSON CONFIRMATION

The cadets' rigging, operating and de-rigging a gyn will serve as the confirmation of this lesson.

CONCLUSION

HOMEWORK/READING/PRACTICE

N/A.

Unofficial convenience copy of A-CR-CCP-603/PF-001, cached 2026-11-08 from https://app.cadets.gc.ca/cadet-publications/A-CR-CCP-603-PF-001/A-CR-CCP-603-PF-001.pdf.
Verify against the official publication.

METHOD OF EVALUATION

N/A.

CLOSING STATEMENT

The operation of a gyn is an exercise that requires teamwork. It is a device that has many practical uses within the Canadian Navy, although it is not used as frequently today as in years past due to improvements in technology. The gyn acts as an introduction to sea activities of the Canadian Forces while stimulating an interest in seamanship specialty training.

INSTRUCTOR NOTES/REMARKS

This EO shall be conducted after EO M321.01 (Describe Safety Procedures for Operating Lifting Devices, Section 1).

The cadets must wear issued cadet boots and hard hats while operating the gyn.

REFERENCES

A1-004 B-GN-181-105/FP-E00 Chief of the Maritime Staff. (2000). *CFCD 105 Fleet Seamanship Rigging and Procedures Manual*. Ottawa, ON: Department of National Defence.

C1-003 (ISBN 11-770973-5) Royal Navy. (1972). *Admiralty Manual of Seamanship* (Vol. 1). London, England: Her Majesty's Stationery Office.

C1-047 (ISBN 0-11-772695-8/BON-050-002/PT-004) Command of the Defence Council. (1995). *BR 67 Admiralty Manual of Seamanship*. London, England: Her Majesty's Stationery Office Publications Centre.

C1-049 (ISBN 0-11-771958-7) Royal Navy. (1967). *Admiralty Manual of Seamanship 1964* (Vol. 2). Cambridge, England: Her Majesty's Stationery Office.

Unofficial convenience copy of A-CR-CCP-603/PF-001, cached 2026-11-08 from https://app.cadets.gc.ca/cadet-publications/A-CR-CCP-603-PF-001/A-CR-CCP-603-PF-001.pdf.
Verify against the official publication.