ROYAL CANADIAN SEA CADETS

PHASE THREE

INSTRUCTIONAL GUIDE

SECTION 3

EO C321.02 – RIG A STANDING DERRICK

Total Time: 150 min

PREPARATION

PRE-LESSON INSTRUCTIONS

Resources needed for the delivery of this lesson are listed in the lesson specification located in A-CR-CCP-603/PG-001, Chapter 4. Specific uses for said resources are identified throughout the instructional guide within the TP for which they are required.

Review the lesson content and become familiar with the material prior to delivering the lesson.

Photocopy and cut out the parts cards located at Annex E.

Photocopy the blank standing derrick diagram located at Annex F, the sequence for Station 3 located at Annex G and the standing derrick scoresheet located at Annex H.

Ensure that the cadets have their issued cadet boots with them.

PRE-LESSON ASSIGNMENT

N/A.

APPROACH

An interactive lecture was chosen for TPs 1–3 to illustrate the function, parts and rigging commands for a standing derrick.

Demonstration and performance was chosen for TPs 4 and 6 as it provides the instructor the opportunity to introduce a standing derrick, demonstrate procedures and observe the cadets rigging and de-rigging a standing derrick.

A practical activity was chosen for TP 5 as it is an interactive way to introduce the cadets to operating a standing derrick in a safe and controlled environment. This activity contributes to the development of seamanship skills and knowledge in a fun and challenging setting.

INTRODUCTION

REVIEW

Review EO M321.01 (Describe Safety Procedures for Operating Lifting Devices, Section 1).

Unofficial convenience copy of A-CR-CCP-603/PF-001, cached 2026-11-08 from https://app.cadets.gc.ca/cadet-publications/A-CR-CCP-603-PF-001/A-CR-CCP-603-PF-001.pdf.
Verify against the official publication.

OBJECTIVES

By the end of this lesson the cadet shall, as a member of a group, rigged, operated and de-rigged a standing derrick.

IMPORTANCE

It is important for cadets rig a standing derrick as it introduces them to sea activities of the Canadian Navy while stimulating an interest in seamanship specialty training. Although the standing derrick is no longer used regularly by the Canadian Navy, it is a great way to foster teamwork and practice seamanship skills.

Teaching point 1 **Explain the Function of a Standing Derrick**

Time: 5 min Method: Interactive Lecture

STANDING DERRICK

Due to improvements in technology, improvised lifting devices are not as widely used today as in the past. However, when no suitable crane or hydraulic device for lifting a heavy object or equipment is available on board or ashore, some form of lifting device must be rigged. This may include sheers, a standing or swinging derrick or a gyn.

A standing derrick is effective in situations that require the load to be hoisted and moved laterally a short distance from the lifting point. It can be rigged with less equipment than other lifting devices as only one spar is required.

Unofficial convenience copy of A-CR-CCP-603/PF-001, cached 2026-11-08 from https://app.cadets.gc.ca/cadet-publications/A-CR-CCP-603-PF-001/A-CR-CCP-603-PF-001.pdf.
Verify against the official publication.

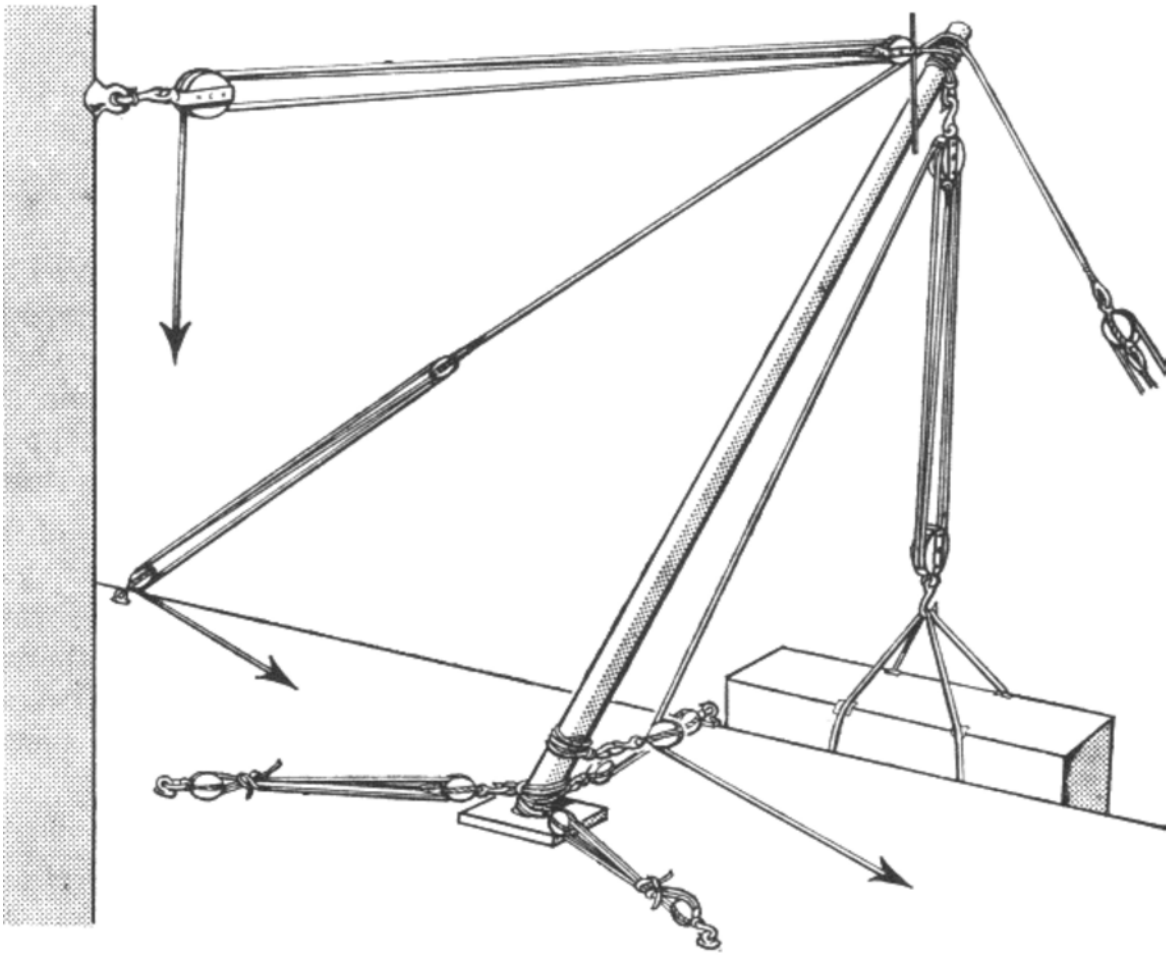

Royal Navy, Admiralty Manual of Seamanship 1967 (Vol. 2), Her Majesty's Stationery Office (p. 195)

Figure 1 Standing Derrick

CONFIRMATION OF TEACHING POINT 1

QUESTIONS

Q1. When is a standing derrick used?

Q2. How many spars are required to rig a standing derrick?

Q3. What is a standing derrick used for?

ANTICIPATED ANSWERS

A1. When no suitable crane or hydraulic device is available on board or ashore.

A2. One.

A3. Hoisting and moving loads laterally a short distance.

Unofficial convenience copy of A-CR-CCP-603/PF-001, cached 2026-11-08 from https://app.cadets.gc.ca/cadet-publications/A-CR-CCP-603-PF-001/A-CR-CCP-603-PF-001.pdf.
Verify against the official publication.

Teaching point 2 **Identify the Parts of a Standing Derrick**

Time: 15 min Method: Interactive Lecture

PARTS OF A STANDING DERRICK

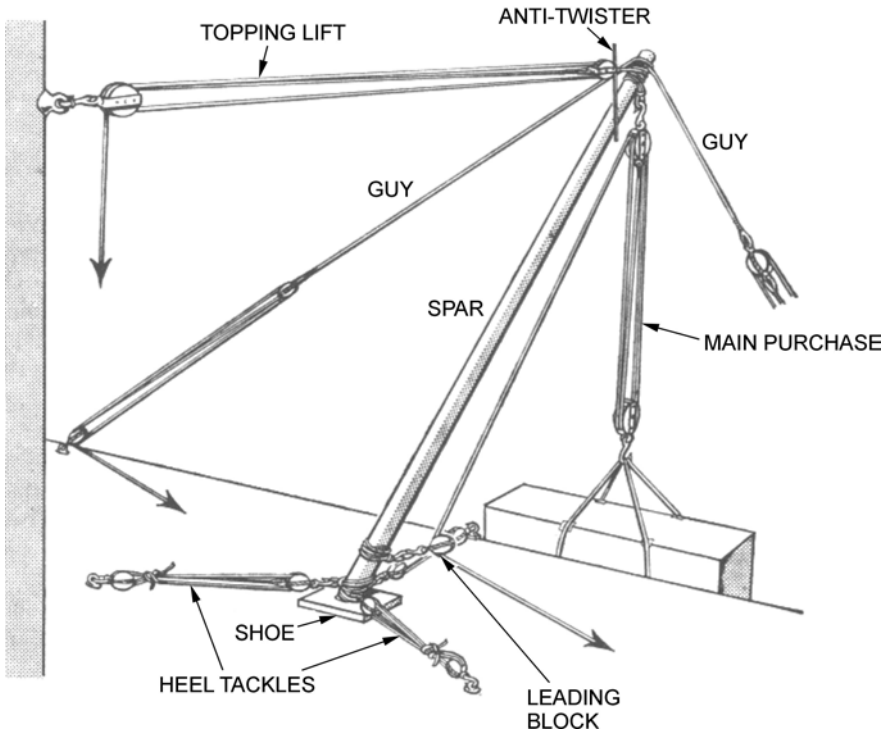

Royal Navy, Admiralty Manual of Seamanship 1967 (Vol. 2), Her Majesty's Stationery Office (p. 195)

Figure 2 Parts of a Standing Derrick

Topping Lift. The topping lift, consisting of a two-fold purchase, is used to raise or lower the standing derrick. If no suitable overhead attachment point exists, the topping lift can be anchored to the deck or ground a minimum distance of one and a half spar lengths from the heel anchor points.

If the topping lift is anchored to the ground, the standing derrick should not be lowered to an angle less than 25 degrees from the ground.

Side Guys. The side guys, consisting of luffs attached to a snotter at the head of the spar, are fitted to give lateral support. The snotter's length will determine how far the standing derrick may slew from side-to-side using the side guys.

Unofficial convenience copy of A-CR-CCP-603/PF-001, cached 2026-11-08 from https://app.cadets.gc.ca/cadet-publications/A-CR-CCP-603-PF-001/A-CR-CCP-603-PF-001.pdf.
Verify against the official publication.

A snotter is a length of line with an eye in each end (as illustrated in Figure 3).



Director Cadets 3, 2008, Ottawa, ON: Department of National Defence

Figure 3 Snotter

Main Purchase. The main purchase, consisting of a two-fold purchase, is attached to the head of the spar and is used to raise or lower the load.

Spar. The spar is the main support system for the standing derrick. The side guys, topping lift and the main purchase are attached to the spar.

Anti-Twister. An optional piece of wood that is attached to the strop at the block of the topping lift used to prevent the topping lift from twisting.

Strops. Strops are a continuous loop in a line or wire rope. They are used to pass around a cask, spar, piece of line, etc to provide an eye to be placed over a hook or shackle (as illustrated in Figure 4).

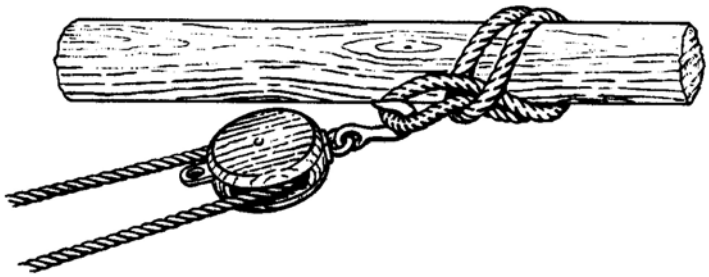

Royal Navy, Admiralty Manual of Seamanship 1964 (Vol. 1), Her Majesty's Stationery Office (p. 193)

Figure 4 Strop on a Spar

Leading Block (for the Fall of the Main Purchase). The leading block is secured to the heel of the spar and the hauling part, or fall of the main purchase, is led through it. This block is used to change the direction of pull on the fall of the main purchase.

The fall of the main purchase refers to its hauling part which exits the standing block attached to the head of the derrick. The fall must be heaved in, in a downward motion, directly under the spar. The leading block allows the line to be safely heaved in from the side of the derrick.

Heel Tackles. The heel tackles, consisting of luffs, are used to prevent the heel from moving.

Tag Line. A line, attached to the running block of the main purchase, used to retrieve the main purchase without stepping into the danger zone.

Martingale (Fore Guy) (if Fitted). If a suitable attachment point exists at the front of the standing derrick, a martingale or fore guy may be led down from the spar (not illustrated in Figure 2). This will prevent the spar from springing up or back when hoisting and lowering a load.

Unofficial convenience copy of A-CR-CCP-603/PF-001, cached 2026-11-08 from https://app.cadets.gc.ca/cadet-publications/A-CR-CCP-603-PF-001/A-CR-CCP-603-PF-001.pdf.
Verify against the official publication.

Shoe (if Fitted). The shoe is usually a square slab of hardwood with a recess in its upper surface to take the heel of a spar. The length of each side should not be less than four times the diameter of the spar. It is used to distribute the weight of the load and the thrust of the spar over an area of the deck. When ashore, it is used to distribute the weight to prevent the spar from sinking into the ground.

Thumb Pieces/Rope Collars (if Fitted). Thumb pieces/rope collars are used to prevent the strops from slipping on the spars (as illustrated in Figure 5). Thumb pieces are wooden pieces that are screwed or nailed to the spar. Rope collars are put onto the spar like a whipping.

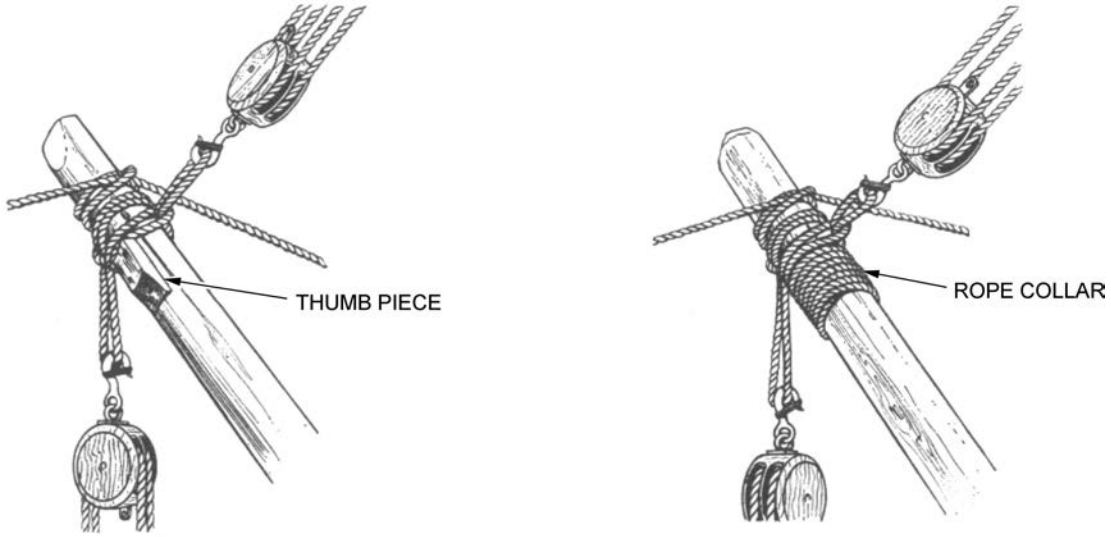

Royal Navy, Admiralty Manual of Seamanship 1967 (Vol. 2), Her Majesty's Stationery Office (p. 207)

Figure 5 Thumb Piece and Rope Collar

CONFIRMATION OF TEACHING POINT 2

QUESTIONS

Q1. What is the minimum angle that the standing derrick may be lowered to when the topping lift is anchored to the floor?

Q2. What is the purpose of a martingale or fore guy?

Q3. What are heel tackles used for?

ANTICIPATED ANSWERS

A1. 25 degrees.

A2. To prevent the spar from springing up or back when hoisting and lowering a load.

A3. To prevent the heel from moving.

Teaching point 3 **Describe the Action Taken in Response to Commands**

Time: 15 min Method: Interactive Lecture

COMMANDS

Heave in. Give a strong pull together on a line.

Unofficial convenience copy of A-CR-CCP-603/PF-001, cached 2026-11-08 from https://app.cadets.gc.ca/cadet-publications/A-CR-CCP-603-PF-001/A-CR-CCP-603-PF-001.pdf.
Verify against the official publication.

Check Away. Ease out a line under control.

Avast. Stop.

Choke. Choke and secure the tackle(s).

Secure. Make fast a line.

Handsomely. Slowly, carefully.

Roundly. Rapidly.

These are the most commonly used commands for working with the standing derrick; however, the list is not exhaustive. Other commands may be used based on unit preferences.

CONFIRMATION OF TEACHING POINT 3

QUESTIONS

Q1. What does the order HEAVE IN mean?

Q2. What order is given to make fast a line?

Q3. What does the order AVAST mean?

ANTICIPATED ANSWERS

A1. Give a strong pull together on a line.

A2. SECURE.

A3. Stop.

Teaching point 4 — **Demonstrate and Have the Cadets, as Members of a Group, Rig a Standing Derrick**

Time: 20 min — Method: Demonstration and Performance

RIGGING A STANDING DERRICK



Demonstrate and have the cadets practice each step in rigging the standing derrick.

1. Place the strops for the main purchase and topping lift over the head of the spar. Attach thumb pieces/ rope collars to prevent the strops from slipping (as illustrated in Figure 5). Lay the strops close together to avoid a bending stress on the spar.

2. Rig the main purchase using a two-fold purchase (as illustrated in Figure 6). Attach the standing block to the main purchase strop. Ensure that the main purchase is rigged to disadvantage with the hauling part, or fall, exiting the standing block. Attach the tag line to the running block and lay it out so an end will be outside of the danger zone when the standing derrick is raised.

Unofficial convenience copy of A-CR-CCP-603/PF-001, cached 2026-11-08 from https://app.cadets.gc.ca/cadet-publications/A-CR-CCP-603-PF-001/A-CR-CCP-603-PF-001.pdf.
Verify against the official publication.

3. Rig the topping lift using a two-fold purchase. Attach the standing block to the topping lift anchor point and the running block to the topping lift strop. Ensure that the topping lift is rigged to disadvantage with the hauling part exiting the standing block. Tie a figure eight knot in the end of the hauling part.

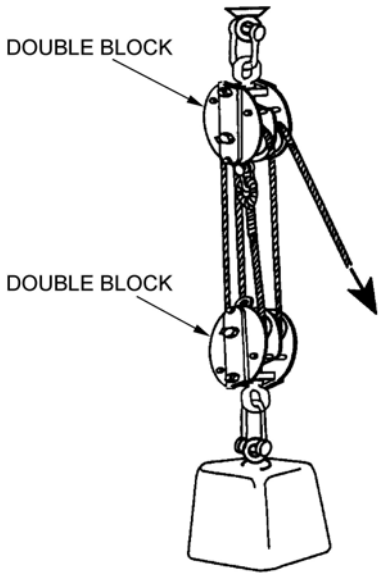

BON-050-002/PT-004 (p. 3-155)

Figure 6 Two-Fold Purchase

4. Attach a snotter over the head of the spar, above the strops, using a clove hitch. Ensure that the eyes of the snotter extend equally from the spar. Rig the side guys using luffs (as illustrated in Figure 7). Attach the running blocks to the eyes in the snotter and the standing block to the side guys anchor point. Ensure that the side guys are rigged to disadvantage with the hauling parts exiting the standing blocks. Tie figure eight knots in the end of the hauling parts.

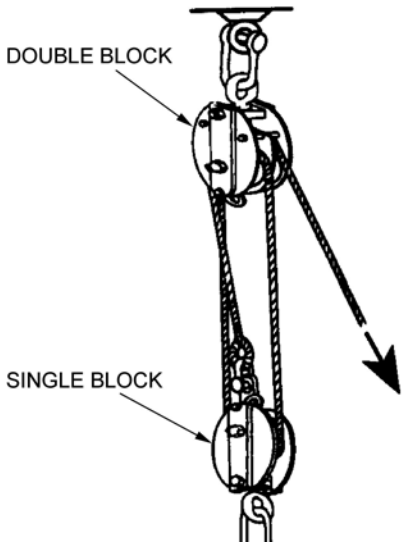

BON-050-002/PT-004 (p. 3-155)

Figure 7 Luff

5. Place the foot of the spar in a shoe if one is fitted.

Unofficial convenience copy of A-CR-CCP-603/PF-001, cached 2026-11-08 from https://app.cadets.gc.ca/cadet-publications/A-CR-CCP-603-PF-001/A-CR-CCP-603-PF-001.pdf.
Verify against the official publication.

6. Rig the heel tackles using luffs. Attach the standing blocks to the heel strops and the running blocks to the heel tackle anchor points. Ensure that the heel tackles are rigged to disadvantage with the hauling parts exiting the standing blocks. Tie a figure eight knot in the end of the hauling part.

7. Attach the leading block strop to the foot of the spar. Hold the strop in place with a thumb piece/rope collar. Reeve the fall of the main purchase through the leading block, tie a figure eight knot in the end and coil the excess line to one side of the spar.

8. Mouse all hooks (as illustrated in Figure 8).

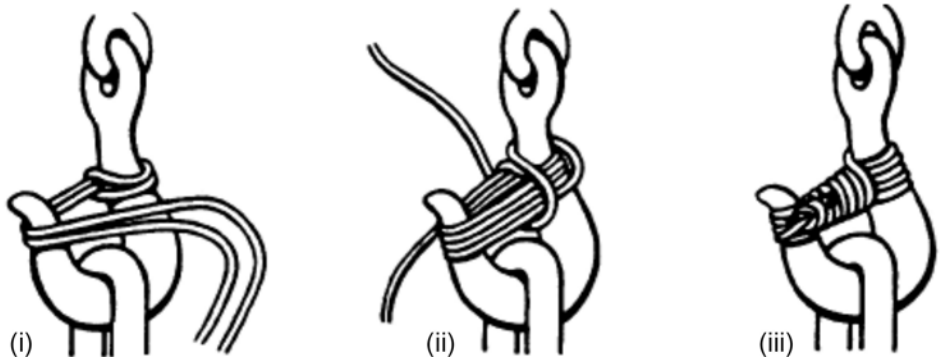

B-GN-181-105/FP-E00 (p. 5-46)

Figure 8 Mousing a Hook



Mousing is not required for blocks equipped with a safety catch on the hook. If the safety catch has been removed or the spring is missing from the catch, the block must be replaced.

9. Heave in all heel tackles until they are evenly taut. Choke and secure the heel tackles. Coil any excess line and place neatly on the deck.

10. Heave in on the topping lift handsomely until the standing derrick has been raised to an angle between 25 and 75 degrees from the floor. Choke and secure the topping lift.



If the topping lift is anchored to the deck, the head of the spar must be picked up and held at chest height until the topping lift becomes taut. The person at the head of the spar shall then step out of the danger zone.

11. Heave in on the tag line to pull the running block out of the danger zone, checking away on the fall of the main purchase, if required.

12. The standing derrick is now complete and ready for operation (as illustrated in Figure 2).

CONFIRMATION OF TEACHING POINT 4

The cadets' participation in rigging a standing derrick will serve as the confirmation of this TP.

Unofficial convenience copy of A-CR-CCP-603/PF-001, cached 2026-11-08 from https://app.cadets.gc.ca/cadet-publications/A-CR-CCP-603-PF-001/A-CR-CCP-603-PF-001.pdf.
Verify against the official publication.

Teaching point 5 **Have the Cadets, as Members of a Group, Operate a Standing Derrick**

Time: 75 min Method: Practical Activity



Demonstrate how to operate the standing derrick prior to starting the activity.

ACTIVITY

OBJECTIVE

The objective of this activity is to have the cadets, as members of a group, operate a standing derrick.

RESOURCES



The list of required equipment for a standing derrick is located in A-CR-CCP-603/PG-001, Chapter 2, Annex C, Appendix 1.

When choosing the equipment for rigging the standing derrick, ensure that each item is compatible with the others (e.g., the blocks are suitable for the size of the line).

- Assembled standing derrick,
- Load of 22 kg (50 lbs) or less,
- Whipping twine,
- Pylons,
- Hooks,
- Hard hats,
- Parts cards located at Annex E,
- Picture/model of a standing derrick (blank picture located at Annex F if required),
- Sequence for Station 3 located at Annex G,
- Scoresheet located at Annex H,
- Whistle, and
- Stopwatch.

ACTIVITY LAYOUT

- Mark off a start line and set up personal safety equipment.
- Set up Station 1 with whipping twine and hooks.
- Set up Station 2 with the picture/model of the standing derrick and a bag/box with parts cards.
- Set up Station 3 with a standing derrick, whipping twine and a load.

Unofficial convenience copy of A-CR-CCP-603/PF-001, cached 2026-11-08 from https://app.cadets.gc.ca/cadet-publications/A-CR-CCP-603-PF-001/A-CR-CCP-603-PF-001.pdf.
Verify against the official publication.



The standing derrick in Station 3 shall be fully rigged (as illustrated in Figure 2).

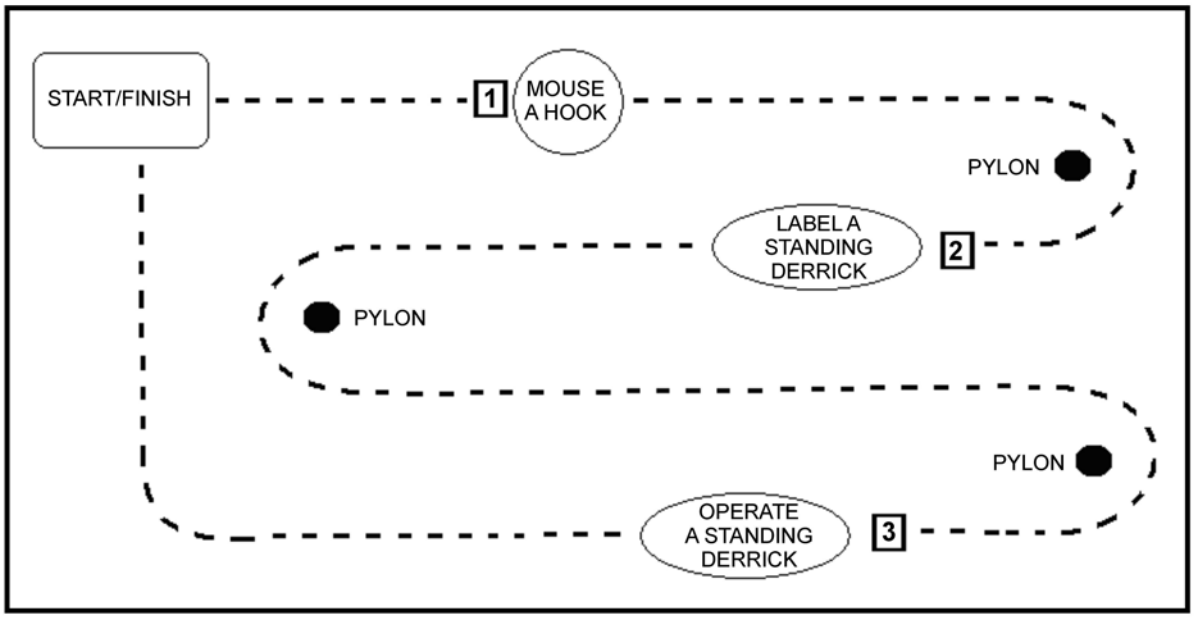

Director Cadets 3, 2008, Ottawa, ON: Department of National Defence

Figure 9 Standing Derrick Run

ACTIVITY INSTRUCTIONS



Encourage the cadets to cheer on the groups while the activity is conducted.

1. Divide the cadets into groups of four.
2. Have the first group line up behind the start line.
3. On the whistle signal, have the group put on their personal safety equipment and proceed to Station 1.



Ensure the time is started on the stopwatch at the whistle signal.

4. At Station 1, have each cadet in the group mouse a hook. Check the mousings for strength. If any of the mousings come off easily, that cadet will do another mousing. Upon successfully completing the mousings, have the group proceed to Station 3.
5. At Station 2, have the group label the picture/model of the standing derrick and then proceed to Station 3.

Unofficial convenience copy of A-CR-CCP-603/PF-001, cached 2026-11-08 from https://app.cadets.gc.ca/cadet-publications/A-CR-CCP-603-PF-001/A-CR-CCP-603-PF-001.pdf.
Verify against the official publication.

6. At Station 3, stop and record the time. Have the group operate the standing derrick by responding to commands from Annex G given by the instructor. Award points IAW the scoresheet found at Annex H.

7. Upon completion of Station 3, have the group proceed to the finish line and tally the score.

8. Repeat the activity for the remaining groups.

9. Declare the group with the most points the winner.

SAFETY

- Ensure the personal safety equipment is worn at all times.
- Ensure the cadets stay clear of all danger zones when the standing derrick has been raised.
- Ensure all hooks are moused or fitted with working safety catches.

CONFIRMATION OF TEACHING POINT 5

The cadets' participation in the activity will serve as the confirmation of this TP.

Teaching point 6 — **Demonstrate and Have the Cadets, as Members of a Group, De-Rig a Standing Derrick**

Time: 10 min — Method: Demonstration and Performance

DE-RIG A STANDING DERRICK



Demonstrate and have the cadets practice each step in de-rigging the standing derrick.

1. Check away the topping lift handsomely, until the spar is resting on the ground.

2. Release the choke on the heel tackles, being careful not to place hands in between the running parts of the luff.



Once the spar is on the ground and the tension has been released from the heel tackles, the standing derrick is safe to de-rig.

3. Cut any mousings that have been applied and unhook the blocks from the strops.

4. Un-reeve the heel, guy, main purchase and topping lift tackles.

5. Remove the strops from the spar.

6. Remove the spar from the shoe.

7. Coil all lines and secure the equipment, as required.

CONFIRMATION OF TEACHING POINT 6

The cadets de-rigging a standing derrick will serve as the confirmation of this TP.

Unofficial convenience copy of A-CR-CCP-603/PF-001, cached 2026-11-08 from https://app.cadets.gc.ca/cadet-publications/A-CR-CCP-603-PF-001/A-CR-CCP-603-PF-001.pdf.
Verify against the official publication.

END OF LESSON CONFIRMATION

The cadets' rigging, operating and de-rigging a standing derrick will serve as the confirmation of this lesson.

CONCLUSION

HOMEWORK/READING/PRACTICE

N/A.

METHOD OF EVALUATION

N/A.

CLOSING STATEMENT

Rigging a standing derrick is an exercise that requires teamwork. The standing derrick is a device that has many practical uses within the Canadian Navy, although it is not used as frequently today as in years past due to the development of technology. It acts as an introduction to sea activities of the Canadian Navy while stimulating an interest in seamanship specialty training.

INSTRUCTOR NOTES/REMARKS

This EO should be conducted after EO M321.01 (Describe Safety Procedures for Operating Lifting Devices, Section 1).

The cadets must wear issued cadet boots and hard hats while operating the standing derrick.

REFERENCES

A1-004 B-GN-181-105/FP-E00 Chief of the Maritime Staff. (2000). *CFCD 105 Fleet Seamanship Rigging and Procedures Manual*. Ottawa, ON: Department of National Defence.

C1-047 (ISBN 0-11-772695-8/BON-050-002/PT-004) Command of the Defence Council. (1995). *BR 67 Admiralty Manual of Seamanship*. London, England: Her Majesty's Stationary Office Publications Centre.

C1-049 (ISBN 0-11-771958-7) Royal Navy. (1967). *Admiralty Manual of Seamanship 1967* (Vol. 2). Cambridge, England: Her Majesty's Stationery Office.

Unofficial convenience copy of A-CR-CCP-603/PF-001, cached 2026-11-08 from https://app.cadets.gc.ca/cadet-publications/A-CR-CCP-603-PF-001/A-CR-CCP-603-PF-001.pdf.
Verify against the official publication.

THIS PAGE INTENTIONALLY LEFT BLANK

Unofficial convenience copy of A-CR-CCP-603/PF-001, cached 2026-11-08 from https://app.cadets.gc.ca/cadet-publications/A-CR-CCP-603-PF-001/A-CR-CCP-603-PF-001.pdf.
Verify against the official publication.