LES AXES DE ROTATION

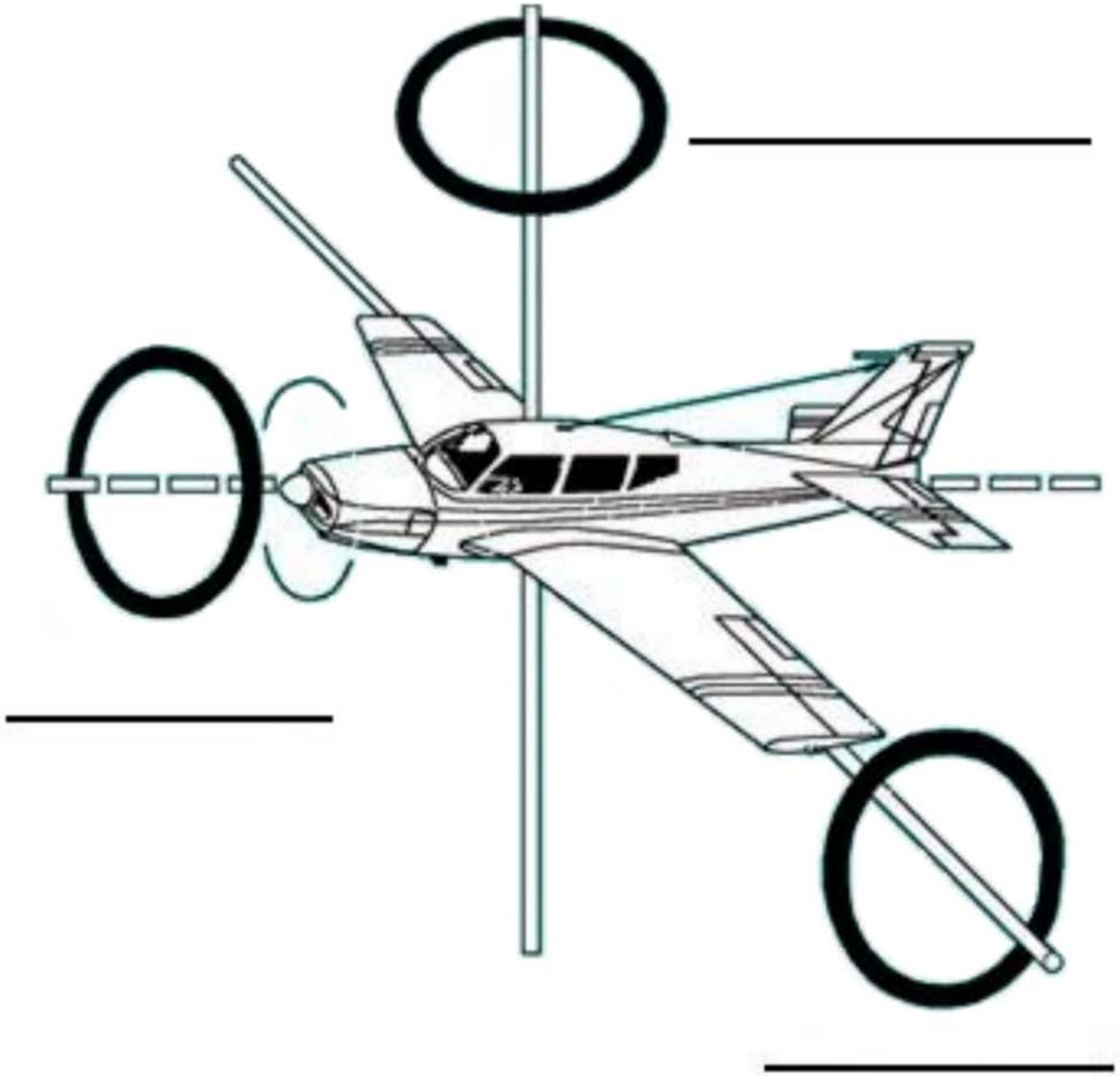

« Controlling the Aircraft », Start Flying, (2007). Extrait le 24 octobre 2007 du site http://www.startflying.com/new%20site/controlling_aircraft.htm

Figure C-1 Les axes de rotation

Unofficial convenience copy of A-CR-CCP-803/PF-002, cached 2026-11-08 from https://app.cadets.gc.ca/cadet-publications/A-CR-CCP-803-PF-002/A-CR-CCP-803-PF-002.pdf.
Verify against the official publication.

CETTE PAGE EST INTENTIONNELLEMENT LAISSÉE EN BLANC

Unofficial convenience copy of A-CR-CCP-803/PF-002, cached 2026-11-08 from https://app.cadets.gc.ca/cadet-publications/A-CR-CCP-803-PF-002/A-CR-CCP-803-PF-002.pdf.
Verify against the official publication.