FORMING AND CUTTING TOOLS

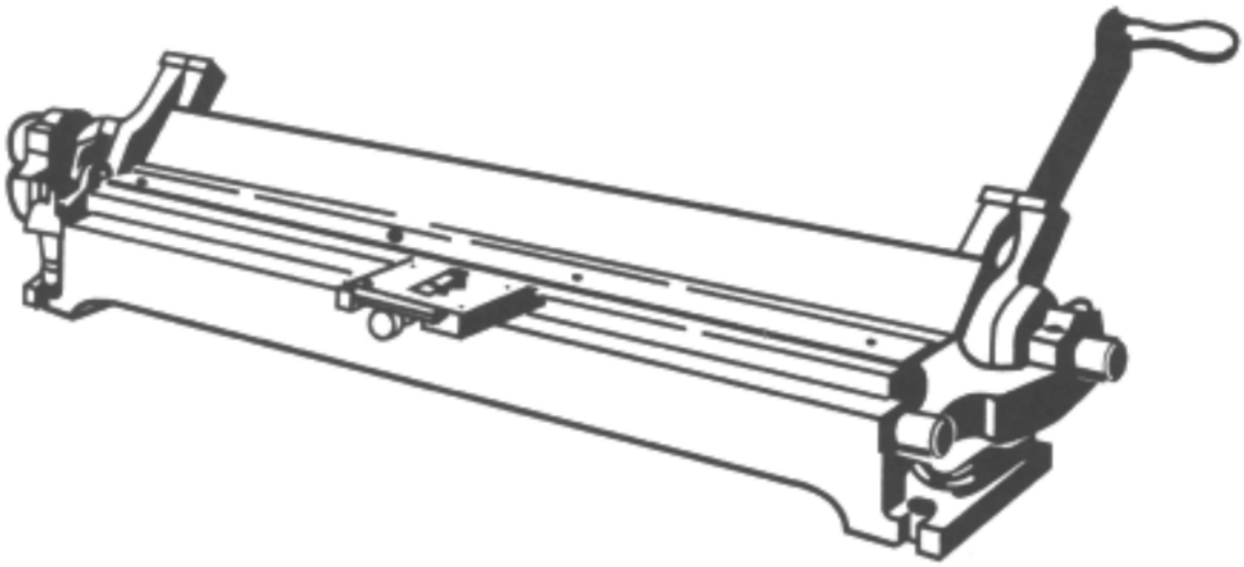

A&P Technician Airframe Textbook, Sanderson Training Systems (pp. 2-30)

Figure R-1 Bar Folding Machine

Unofficial convenience copy of A-CR-CCP-803/PF-001, cached 2026-11-08 from https://app.cadets.gc.ca/cadet-publications/A-CR-CCP-803-PF-001/A-CR-CCP-803-PF-001.pdf.
Verify against the official publication.

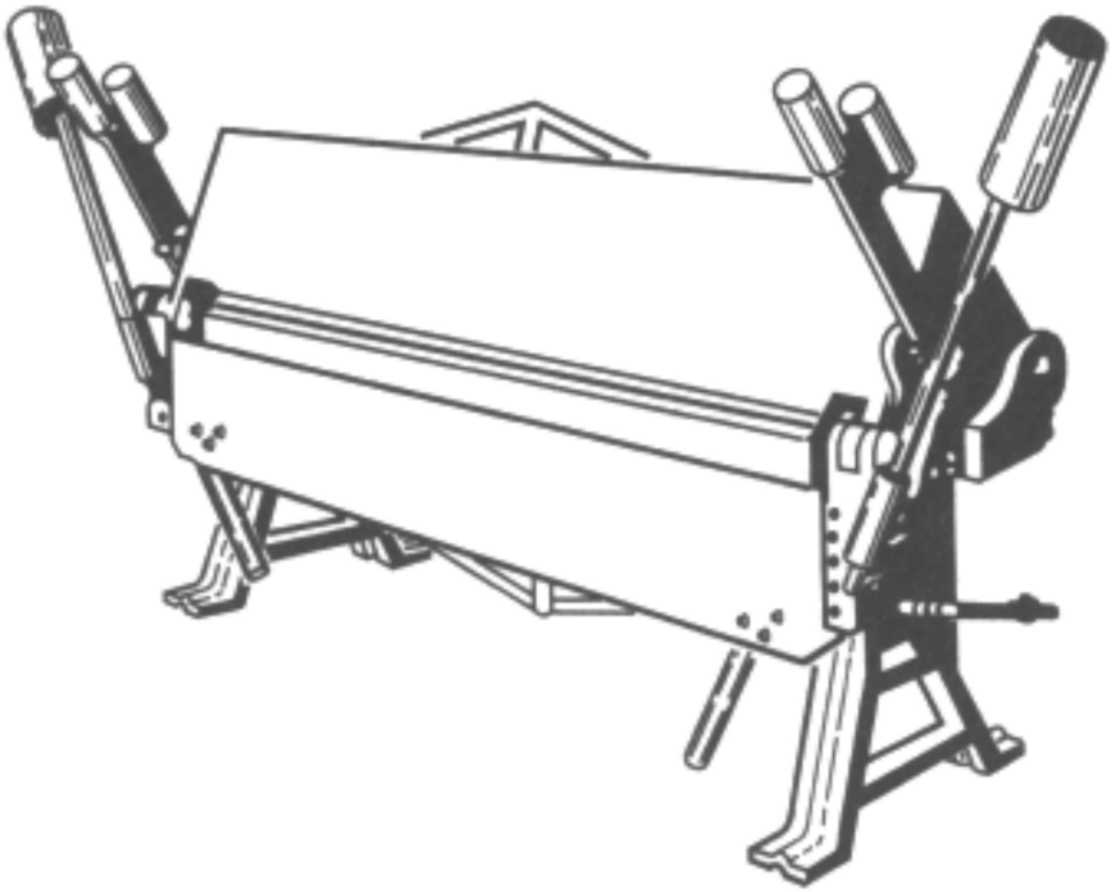

A&P Technician Airframe Textbook, Sanderson Training Systems (pp. 2-29)

Figure R-2 Cornice Break

Unofficial convenience copy of A-CR-CCP-803/PF-001, cached 2026-11-08 from https://app.cadets.gc.ca/cadet-publications/A-CR-CCP-803-PF-001/A-CR-CCP-803-PF-001.pdf.
Verify against the official publication.

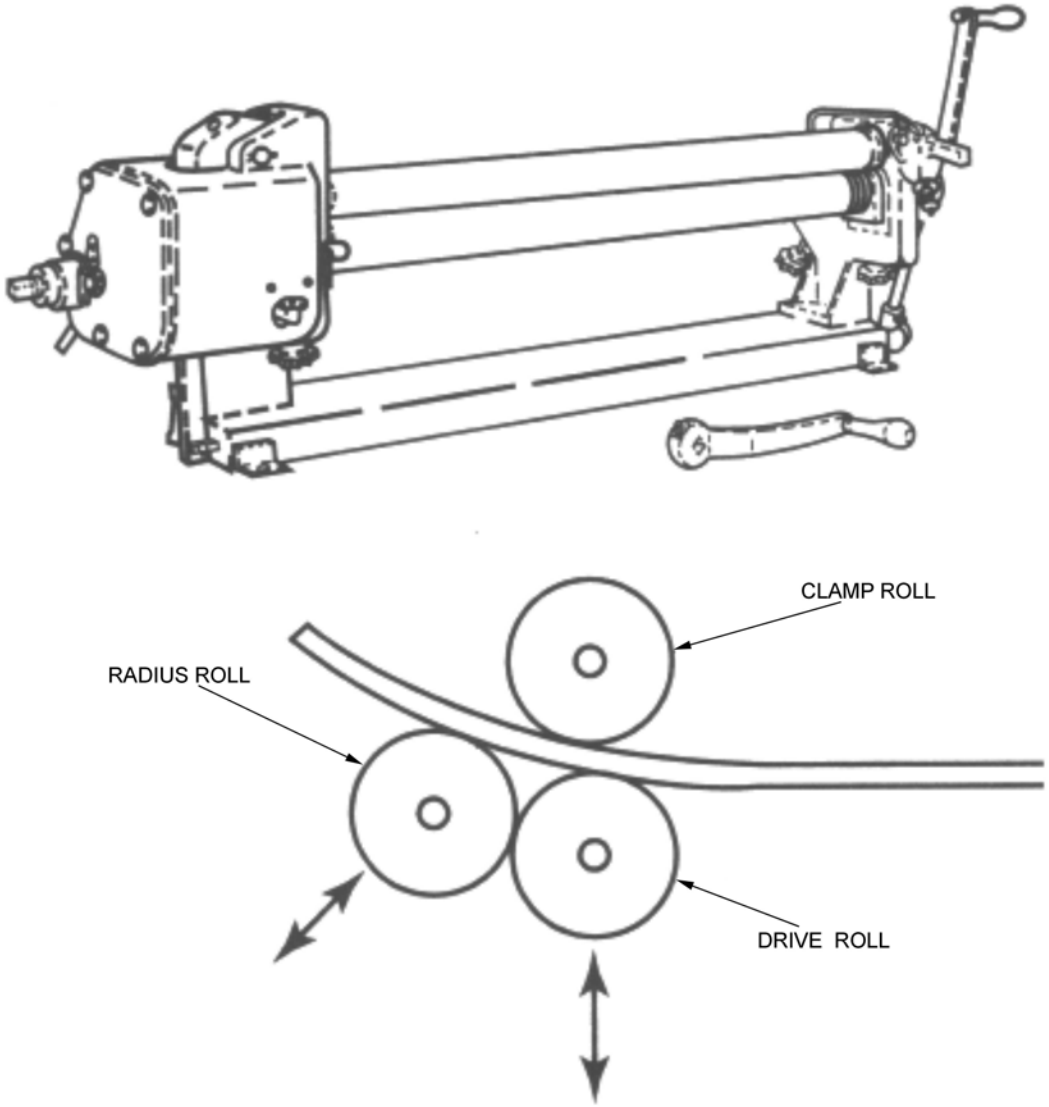

A&P Technician Airframe Textbook, Sanderson Training Systems (pp. 2-31)

Figure R-3 Slip Roll Former

Unofficial convenience copy of A-CR-CCP-803/PF-001, cached 2026-11-08 from https://app.cadets.gc.ca/cadet-publications/A-CR-CCP-803-PF-001/A-CR-CCP-803-PF-001.pdf.
Verify against the official publication.



Triway YangZhong International Trade Company, Hydropress. Retrieved November 17, 2007, from http://www.nantex-triway.com/equipment.htm

Figure R-4 Hydropress

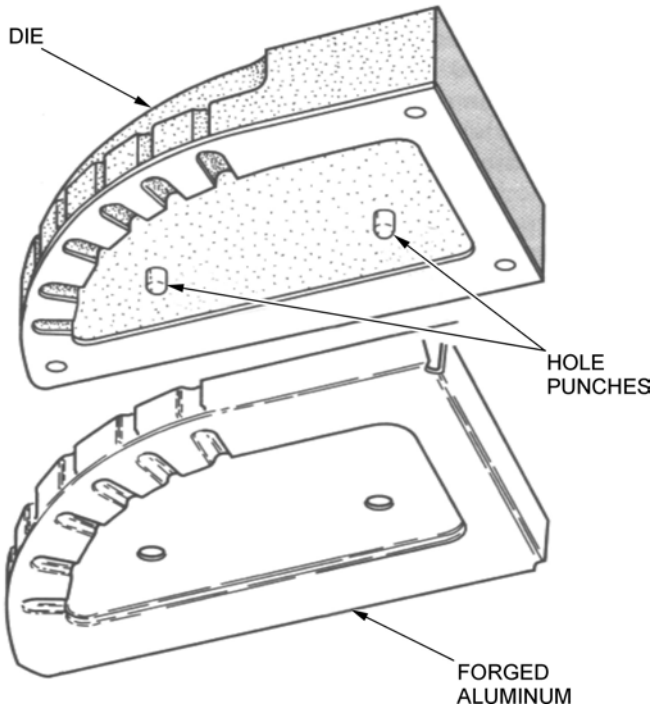

A&P Technician Airframe Textbook, Sanderson Training Systems (pp. 2-32)

Figure R-5 Hydropress Die With Forged Aluminum Product

Unofficial convenience copy of A-CR-CCP-803/PF-001, cached 2026-11-08 from https://app.cadets.gc.ca/cadet-publications/A-CR-CCP-803-PF-001/A-CR-CCP-803-PF-001.pdf.
Verify against the official publication.

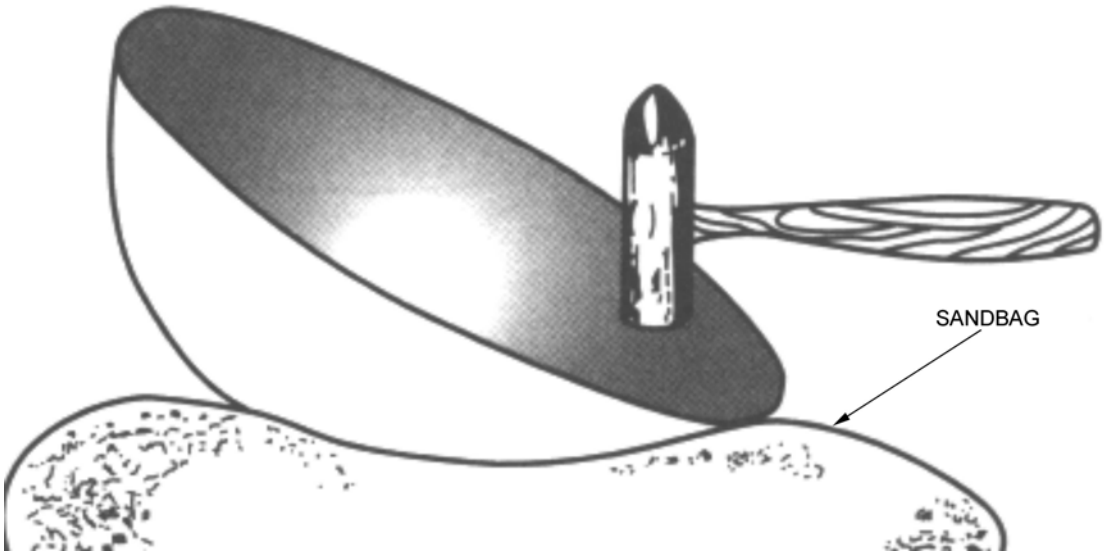

A&P Technician Airframe Textbook, Sanderson Training Systems (pp. 2-32)

Figure R-6 Sandbag Forming

Unofficial convenience copy of A-CR-CCP-803/PF-001, cached 2026-11-08 from https://app.cadets.gc.ca/cadet-publications/A-CR-CCP-803-PF-001/A-CR-CCP-803-PF-001.pdf.
Verify against the official publication.

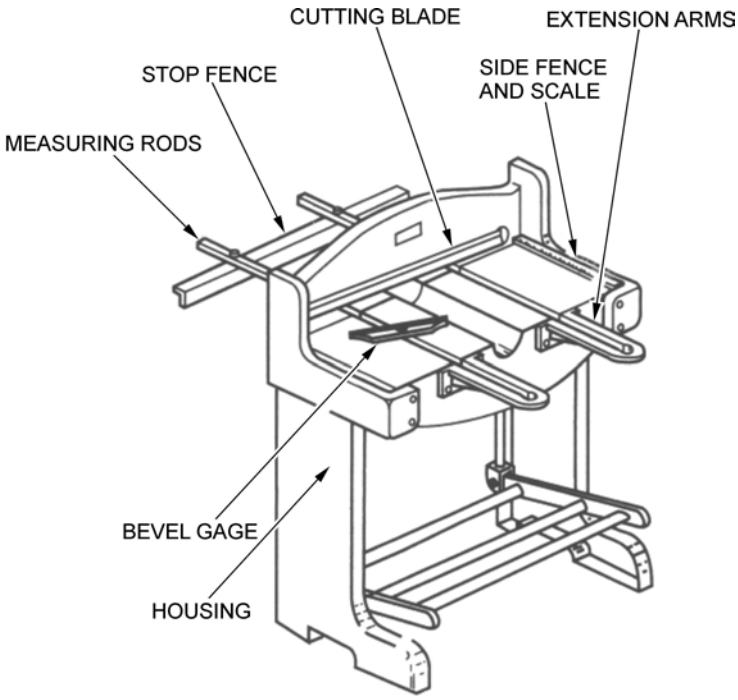

A&P Technician Airframe Textbook, Sanderson Training Systems (pp. 2-22)

Figure R-7 Squaring Shear

Unofficial convenience copy of A-CR-CCP-803/PF-001, cached 2026-11-08 from https://app.cadets.gc.ca/cadet-publications/A-CR-CCP-803-PF-001/A-CR-CCP-803-PF-001.pdf.
Verify against the official publication.

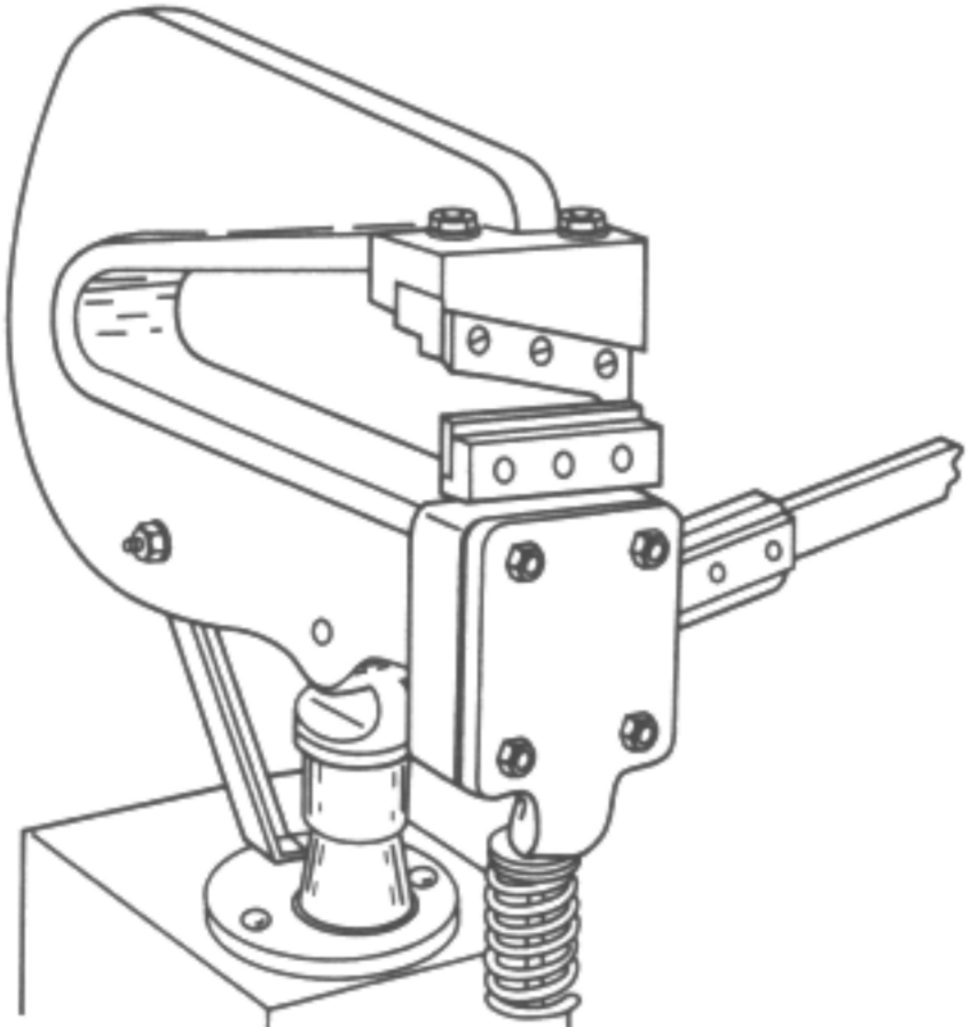

A&P Technician Airframe Textbook, Sanderson Training Systems (pp. 2-24)

Figure R-8 Scroll Shears

Unofficial convenience copy of A-CR-CCP-803/PF-001, cached 2026-11-08 from https://app.cadets.gc.ca/cadet-publications/A-CR-CCP-803-PF-001/A-CR-CCP-803-PF-001.pdf.
Verify against the official publication.

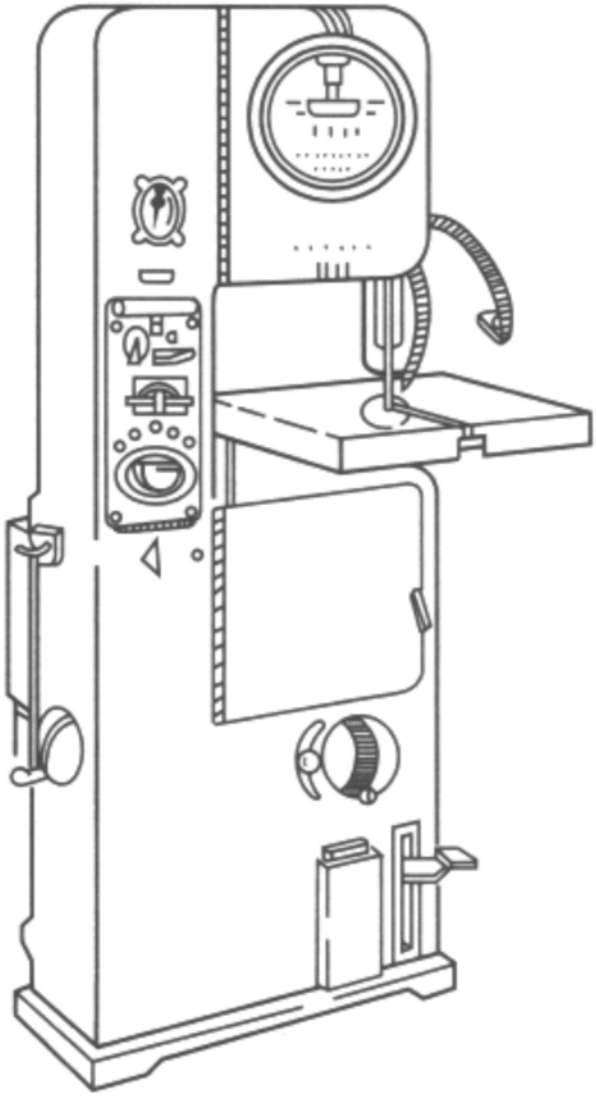

A&P Technician Airframe Textbook, Sanderson Training Systems (pp. 2-23)

Figure R-9 Band Saw

Unofficial convenience copy of A-CR-CCP-803/PF-001, cached 2026-11-08 from https://app.cadets.gc.ca/cadet-publications/A-CR-CCP-803-PF-001/A-CR-CCP-803-PF-001.pdf.
Verify against the official publication.

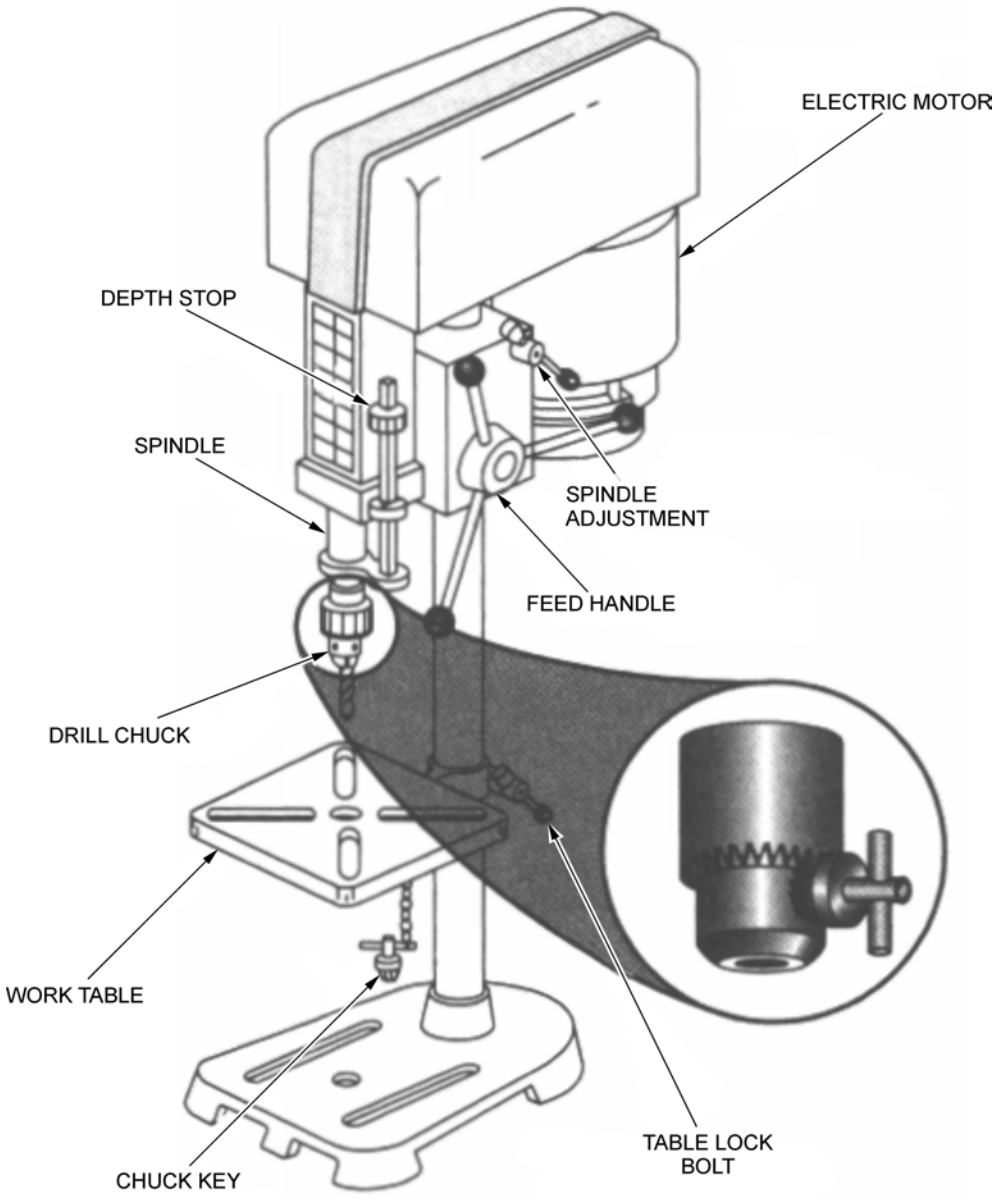

A&P Technician Airframe Textbook, Sanderson Training Systems (pp. 2-26)

Figure R-10 Drill Press

Unofficial convenience copy of A-CR-CCP-803/PF-001, cached 2026-11-08 from https://app.cadets.gc.ca/cadet-publications/A-CR-CCP-803-PF-001/A-CR-CCP-803-PF-001.pdf.
Verify against the official publication.

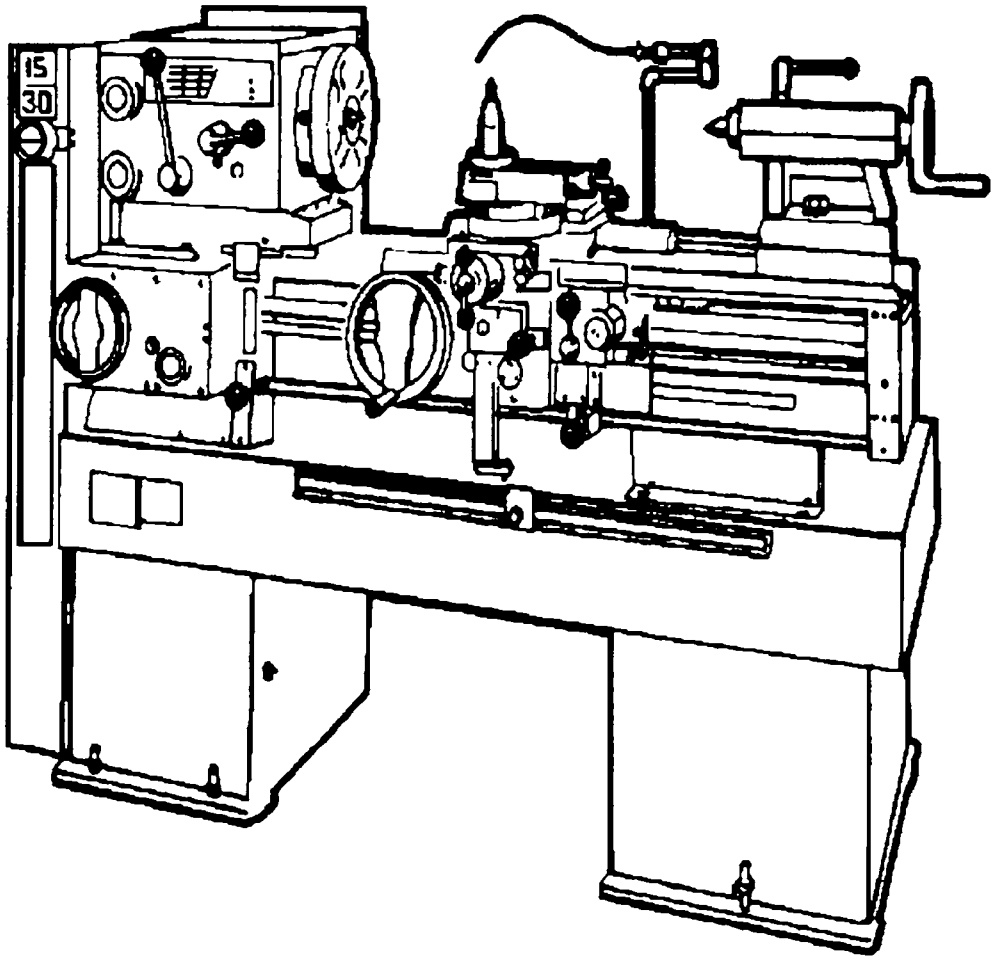

Fundamentals of Machine Tools, Headquarters Department of the Army Washington DC ,1996, Training Circular No. 9-524. Retrieved November 23, 2007, from http://metalworking.com/tutorials/army-TC-9-524/TOC.pdf

Figure R-11 Metal Lathe

Unofficial convenience copy of A-CR-CCP-803/PF-001, cached 2026-11-08 from https://app.cadets.gc.ca/cadet-publications/A-CR-CCP-803-PF-001/A-CR-CCP-803-PF-001.pdf.
Verify against the official publication.

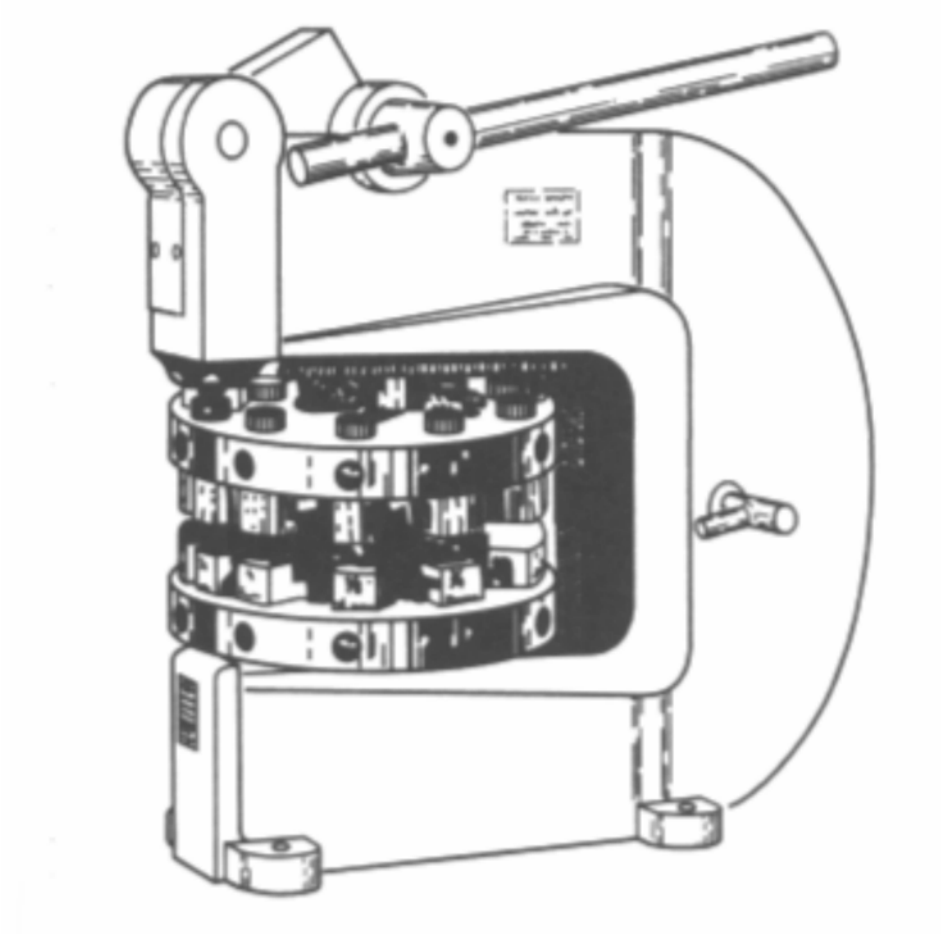

A&P Technician Airframe Textbook, Sanderson Training Systems (pp. 2-23)

Figure R-12 Rotary Punch

Unofficial convenience copy of A-CR-CCP-803/PF-001, cached 2026-11-08 from https://app.cadets.gc.ca/cadet-publications/A-CR-CCP-803-PF-001/A-CR-CCP-803-PF-001.pdf.
Verify against the official publication.

THIS PAGE INTENTIONALLY LEFT BLANK

Unofficial convenience copy of A-CR-CCP-803/PF-001, cached 2026-11-08 from https://app.cadets.gc.ca/cadet-publications/A-CR-CCP-803-PF-001/A-CR-CCP-803-PF-001.pdf.
Verify against the official publication.