LAUNCHING PLATFORMS

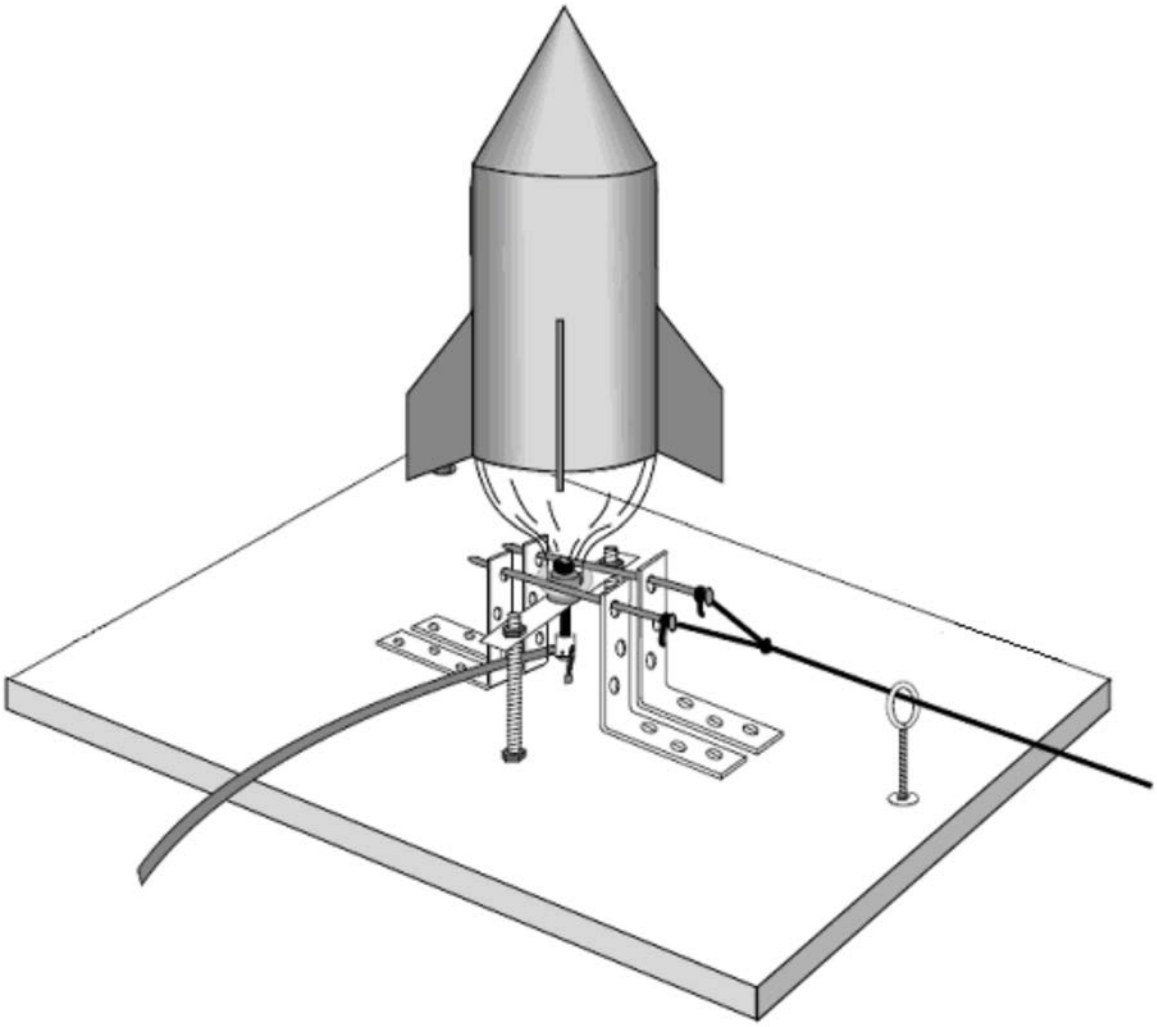

"Rockets: A Teacher's Guide with Activities in Science, Mathematics, and Technology", by NASA, 2003, Bottle Rocket Launcher. Retrieved April 12, 2008, from http://www.nasa.gov/pdf/153405main_Rockets.Guide.Bottle.Rocket.Launcher.pdf

Figure W-1 Parts of the Launch Pad

Unofficial convenience copy of A-CR-CCP-803/PF-001, cached 2026-11-08 from https://app.cadets.gc.ca/cadet-publications/A-CR-CCP-803-PF-001/A-CR-CCP-803-PF-001.pdf.
Verify against the official publication.

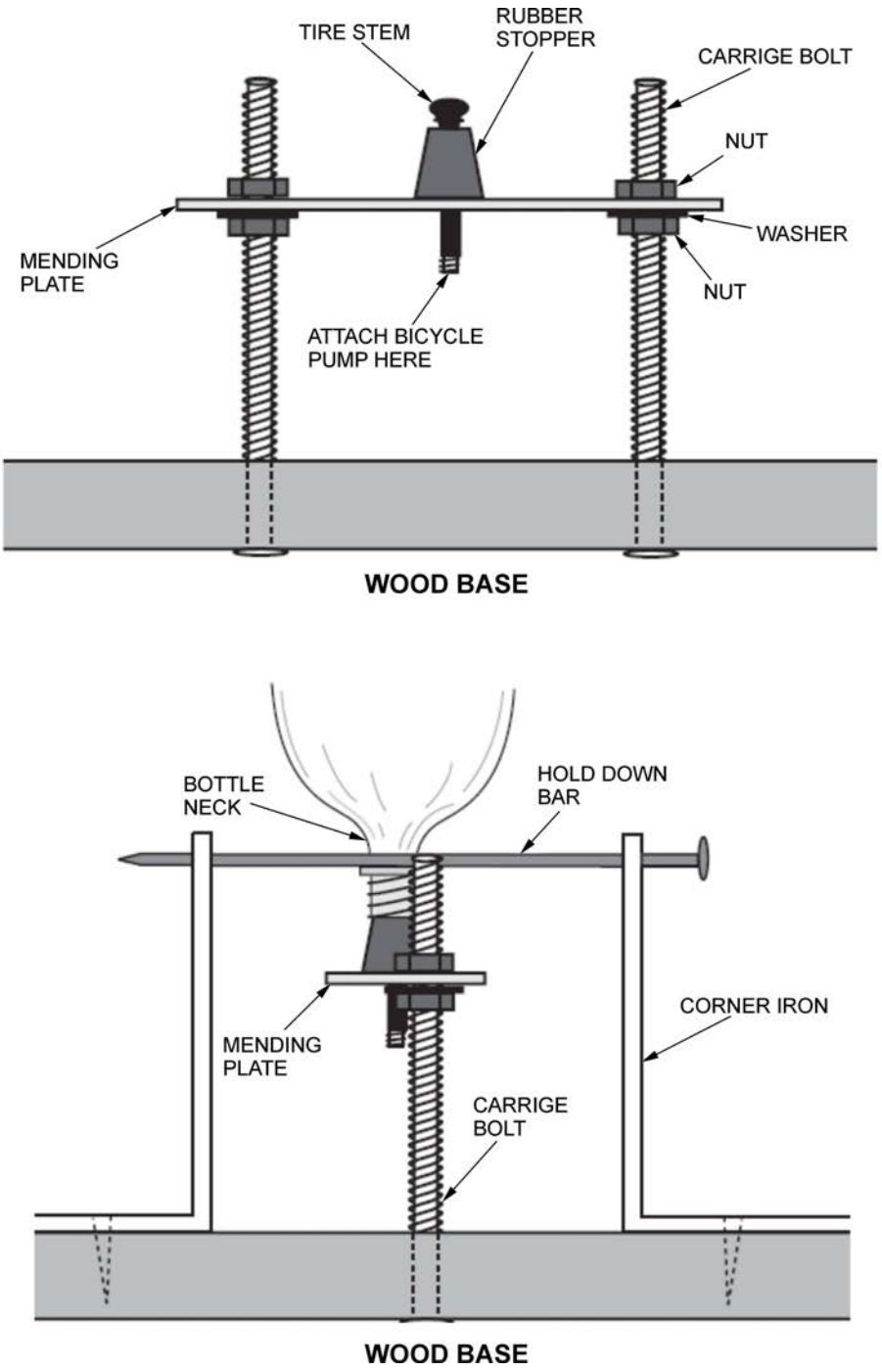

"Rockets: A Teacher's Guide with Activities in Science, Mathematics, and Technology", by NASA, 2003, Bottle Rocket Launcher. Retrieved April 12, 2008, from http://www.nasa.gov/pdf/153405main_Rockets.Guide.Bottle.Rocket.Launcher.pdf

Figure W-2 Details of the Launch Pad

Unofficial convenience copy of A-CR-CCP-803/PF-001, cached 2026-11-08 from https://app.cadets.gc.ca/cadet-publications/A-CR-CCP-803-PF-001/A-CR-CCP-803-PF-001.pdf.
Verify against the official publication.

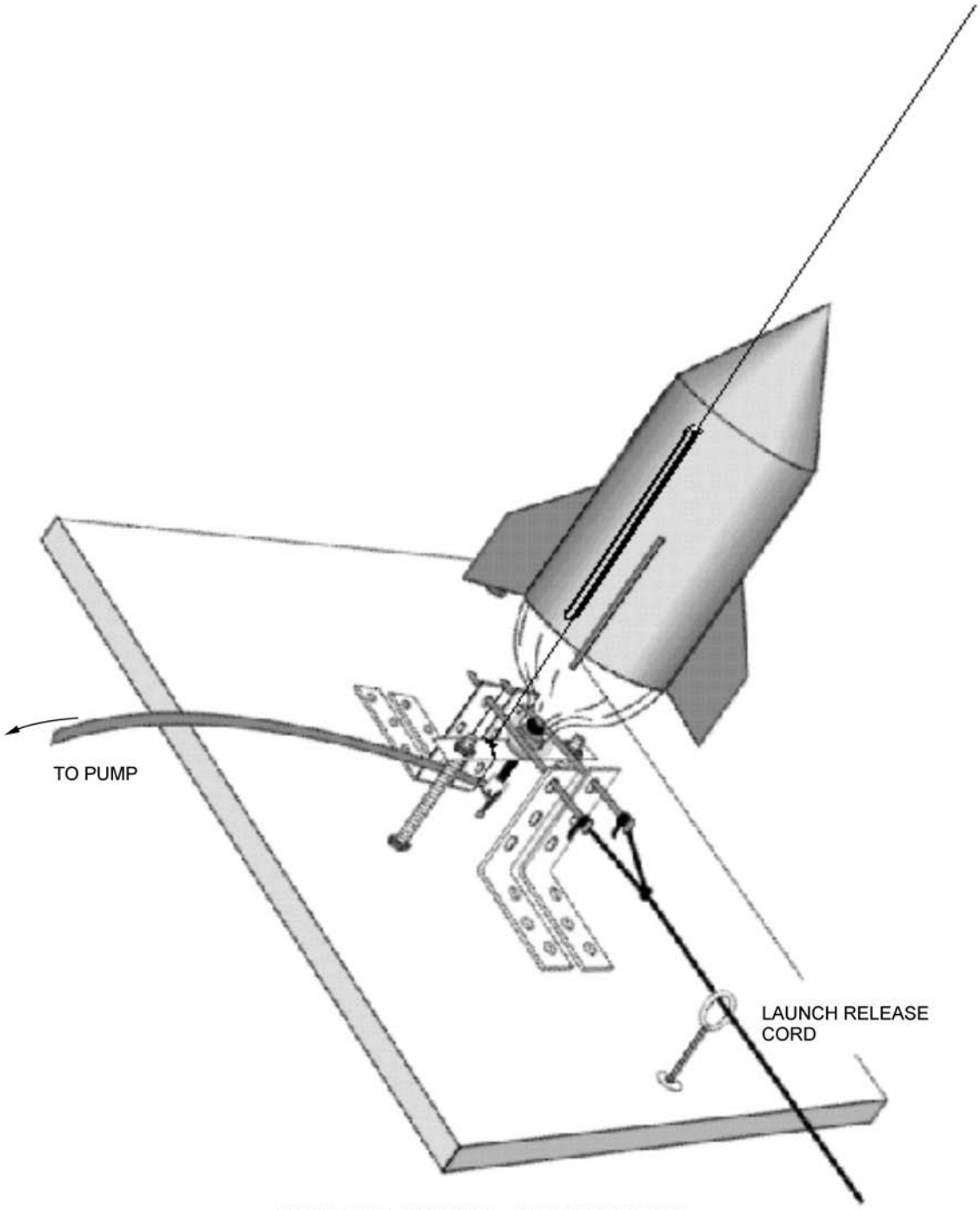

COMPLETED LAUNCHER READY FOR FIRING

"Rockets: A Teacher's Guide with Activities in Science, Mathematics, and Technology", by NASA, 2003, Bottle Rocket Launcher. Retrieved April 12, 2008, from http://www.nasa.gov/pdf/153405main_Rockets.Guide.Bottle.Rocket.Launcher.pdf

Figure W-3 Launch Time

Unofficial convenience copy of A-CR-CCP-803/PF-001, cached 2026-11-08 from https://app.cadets.gc.ca/cadet-publications/A-CR-CCP-803-PF-001/A-CR-CCP-803-PF-001.pdf.
Verify against the official publication.

THIS PAGE INTENTIONALLY LEFT BLANK

Unofficial convenience copy of A-CR-CCP-803/PF-001, cached 2026-11-08 from https://app.cadets.gc.ca/cadet-publications/A-CR-CCP-803-PF-001/A-CR-CCP-803-PF-001.pdf.
Verify against the official publication.