VOSTOK PROGRAM

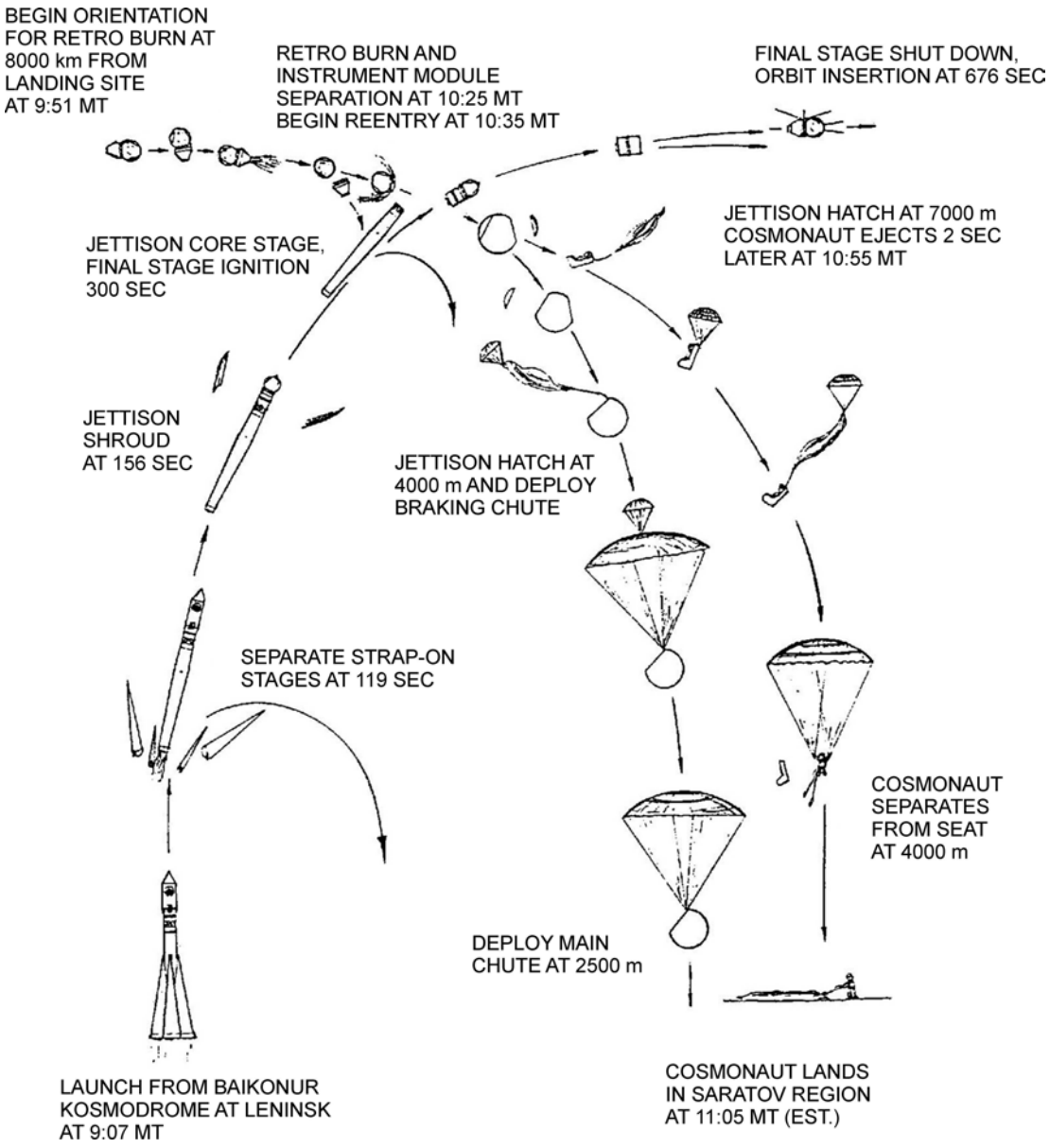

"Great Images in NASA", 2002, GPN-2002-000224. Retrieved December 1, 2007, from http://grin.hq.nasa.gov/ABSTRACTS/GPN-2000-001053.html

Figure L-1 Vostok-1 Historic First Manned Spacefight

Unofficial convenience copy of A-CR-CCP-803/PF-001, cached 2026-11-08 from https://app.cadets.gc.ca/cadet-publications/A-CR-CCP-803-PF-001/A-CR-CCP-803-PF-001.pdf.
Verify against the official publication.

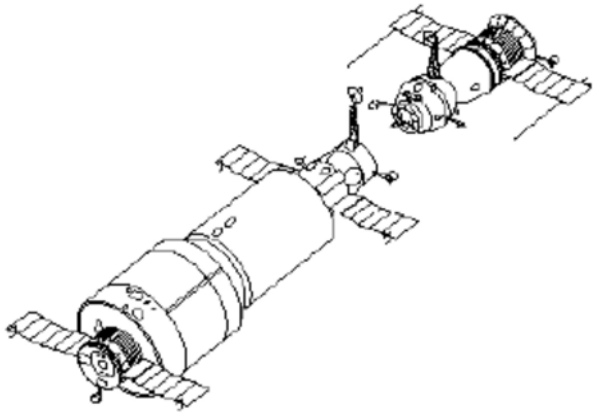

"NASA Facts", 1997, International Space Station: Russian Space Stations. Retrieved December 1, 2007, from http://spaceflight.nasa.gov/history/shuttle-mir/spacecraft/to-s-mir.htm

Figure L-2 Salyut-1 Station With a Soyuz About to Dock

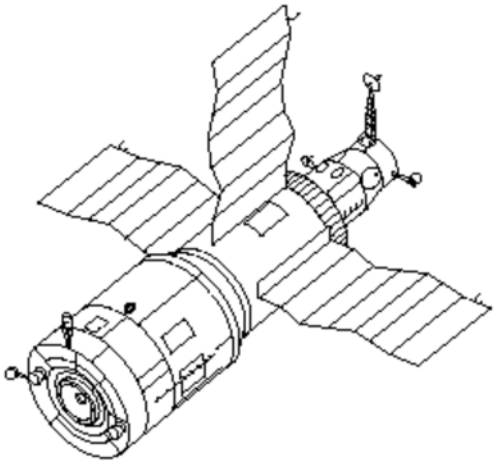

"NASA Facts", 1997, International Space Station: Russian Space Stations. Retrieved December 1, 2007, from http://spaceflight.nasa.gov/history/shuttle-mir/spacecraft/to-s-mir.htm

Figure L-3 Salyut-6 (1977–1982)

Unofficial convenience copy of A-CR-CCP-803/PF-001, cached 2026-11-08 from https://app.cadets.gc.ca/cadet-publications/A-CR-CCP-803-PF-001/A-CR-CCP-803-PF-001.pdf.
Verify against the official publication.



"Wikipedia", 2007, Salyut Program. Retrieved November 30, 2007, from http://en.wikipedia.org/wiki/Image:Salyut_7_from_Soyuz_T-13.jpg

Figure L-4 Salyut-7

Unofficial convenience copy of A-CR-CCP-803/PF-001, cached 2026-11-08 from https://app.cadets.gc.ca/cadet-publications/A-CR-CCP-803-PF-001/A-CR-CCP-803-PF-001.pdf.
Verify against the official publication.

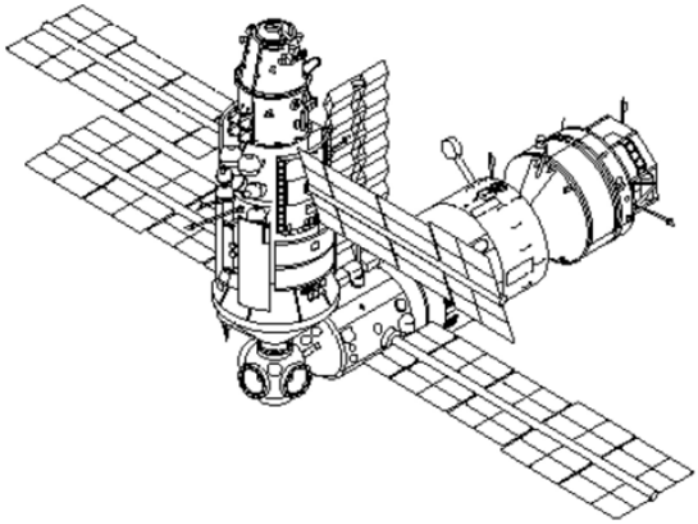

"NASA Facts", 1997, International Space Station: Russian Space Stations. Retrieved December 1, 2007, from http://spaceflight.nasa.gov/history/shuttle-mir/spacecraft/to-s-mir.htm

Figure L-5 Mir Space Station

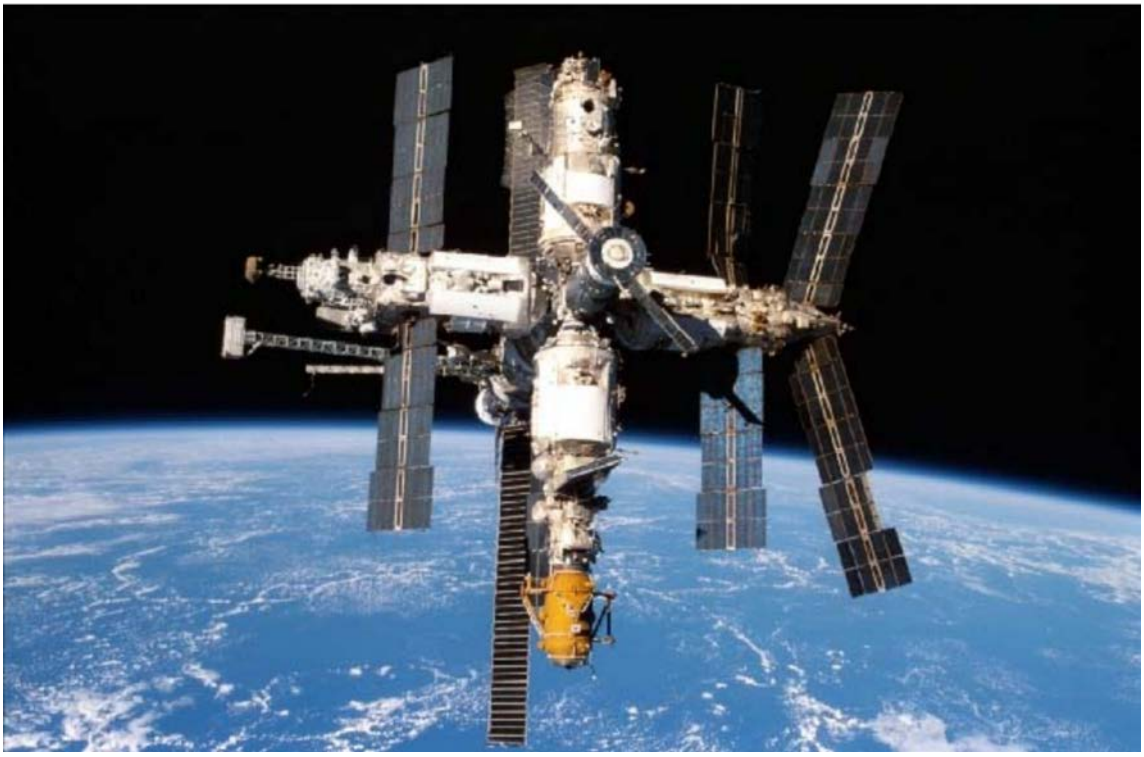

NASA "Multimedia Photo Gallery", 1998, STS 89. Retrieved December 2, 2007, from http://spaceflight.nasa.gov/history/shuttle-mir/spacecraft/s-mir.htm

Figure L-6 The Mir Space Station and Earth

Unofficial convenience copy of A-CR-CCP-803/PF-001, cached 2026-11-08 from https://app.cadets.gc.ca/cadet-publications/A-CR-CCP-803-PF-001/A-CR-CCP-803-PF-001.pdf.
Verify against the official publication.