AXES OF ROTATION

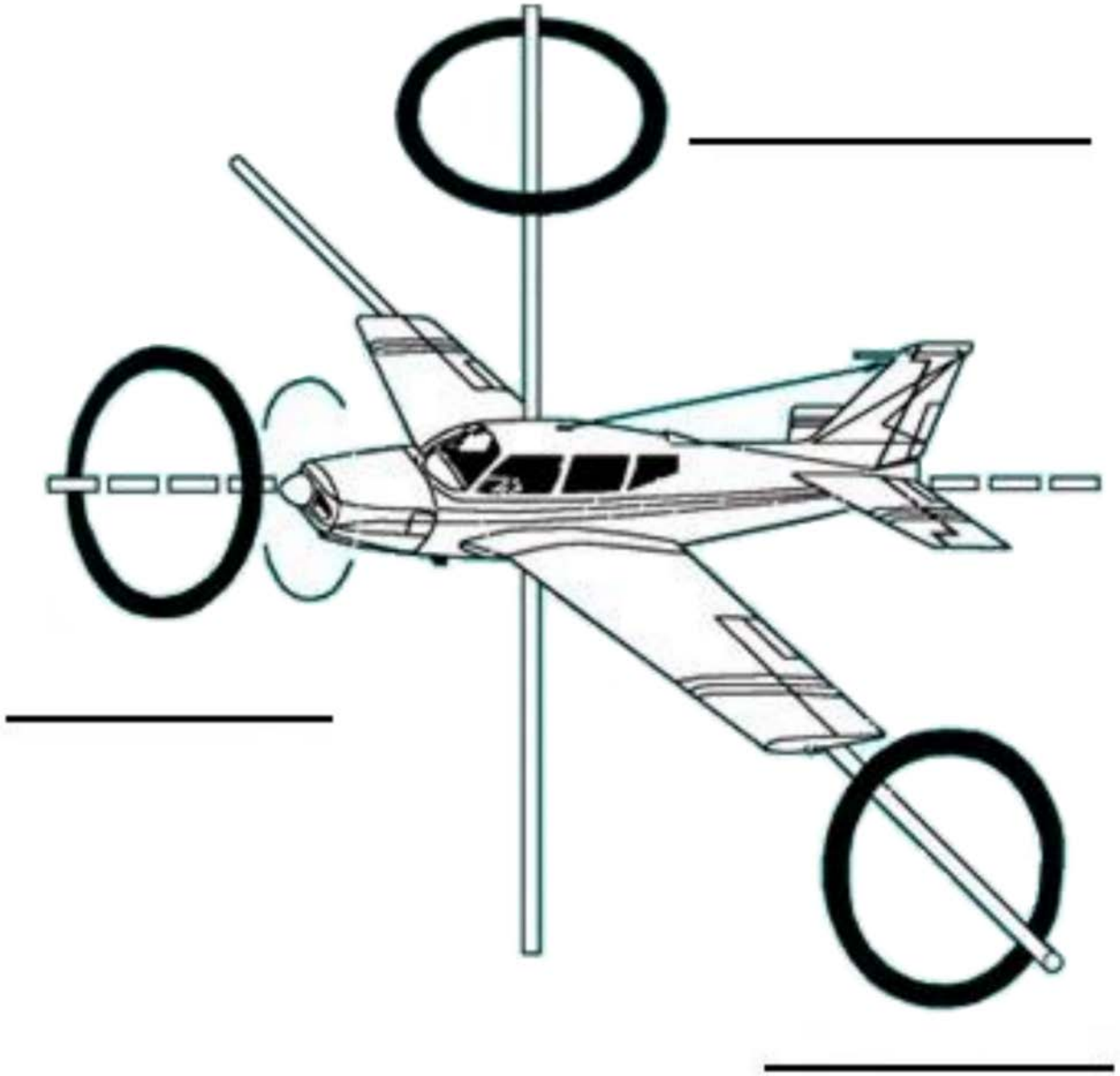

"Controlling the Aircraft", Start Flying, (2007). Retrieved October 24, 2007, from http://www.startflying.com/new%20site/controlling_aircraft.htm

Figure C-1 Axes of Rotation

Unofficial convenience copy of A-CR-CCP-803/PF-001, cached 2026-11-08 from https://app.cadets.gc.ca/cadet-publications/A-CR-CCP-803-PF-001/A-CR-CCP-803-PF-001.pdf.
Verify against the official publication.

THIS PAGE INTENTIONALLY LEFT BLANK

Unofficial convenience copy of A-CR-CCP-803/PF-001, cached 2026-11-08 from https://app.cadets.gc.ca/cadet-publications/A-CR-CCP-803-PF-001/A-CR-CCP-803-PF-001.pdf.
Verify against the official publication.