ANNEX B, APPENDIX 6

AVIATION SUBJECTS–COMBINED ASSESSMENT PC

ASSESSMENT INSTRUCTIONS

PREPARATION

PRE-ASSESSMENT INSTRUCTIONS

Review the assessment plan, assessment instructions and Aviation Subjects–Combined Assessment PC and become familiar with the material prior to conducting the assessment.

Photocopy the Assessment Tool for each cadet.

PRE-ASSESSMENT ASSIGNMENT

Nil.

ASSESSMENT METHOD

A selected response assessment was chosen to assess the cadet's knowledge of the principles of flight, aero engines, meteorology and navigation.

CONDUCT OF ASSESSMENT

PURPOSE

The purpose of this PC is to assess the cadet’s knowledge of aviation subjects including principles of flight, aero engines, meteorology, and navigation.

RESOURCES

- Aviation Subjects–Combined Assessment PC, and
- Pen / pencil.

ASSESSMENT ACTIVITY LAYOUT

This assessment shall be conducted in a classroom. Desks shall be separated as much as possible.



Criteria for assessing the cadet's knowledge are:

- Incomplete. Less than 60 percent.
- Completed with difficulty. 60–74 percent.
- Completed without difficulty. 75–89 percent.
- Exceeded standard. 90–100 percent.

ASSESSMENT ACTIVITY INSTRUCTIONS

1. Distribute a pen / pencil to each cadet.
2. Distribute the Assessment Tool to each cadet face up and instruct them to begin only when told to do so.

Unofficial convenience copy of A-CR-CCP-804/PG-001, cached 2026-11-08 from https://app.cadets.gc.ca/cadet-publications/A-CR-CCP-804-PG-001/A-CR-CCP-804-PG-001.pdf.
Verify against the official publication.

3. Explain the structure of the Assessment Tool.
4. Have the cadets write their names on the top of the Assessment Tool.
5. Have the cadets write the Assessment Tool.
6. Give the cadets a 10-minute warning.
7. Give the cadets a 5-minute warning.
8. Collect the Assessment Tools.

POST ASSESSMENT INSTRUCTIONS

RECORDING ASSESSMENT RESULTS

The overall rating for Aviation Subjects–Combined Assessment PC will be recorded on the Proficiency Level Four Qualification Record located at Chapter 3, Annex C.

PROVIDING ASSESSMENT FEEDBACK

Inform each cadet of their grade. No debriefing is required for those cadets who score 60 percent or more on the Assessment Tool. Cadets who score less than 60 percent will be debriefed individually. Those cadets are required to write a re-test. Any cadets who require a re-test must be tutored prior to the re-test. The content of the tutoring session will vary depending on the cadet. The aim of this session is to review the mistakes made in the original assessment and to prepare the cadet for the re-test.

Unofficial convenience copy of A-CR-CCP-804/PG-001, cached 2026-11-08 from https://app.cadets.gc.ca/cadet-publications/A-CR-CCP-804-PG-001/A-CR-CCP-804-PG-001.pdf.
Verify against the official publication.

AVIATION SUBJECTS–COMBINED ASSESSMENT PC

Cadet's Name: _____ Date: _____

Part A–Multiple Choice (43 points)

1. The very thin layer of air lying over the surface of the wing is called the _____ layer.

   - transition.
   - boundary.
   - turbulent.
   - laminar.

2. Conventional airfoils are generally the thickest at _____ percent of the chord.

   - 15.
   - 25.
   - 50.
   - 65.

3. Laminar flow airfoils reduce drag by maintaining the _____ flow of air throughout a greater percentage of the _____.

   - turbulent, chord.
   - turbulent, span.
   - laminar, chord.
   - laminar, span.

4. Aspect ratio is calculated by:

   - dividing the span by the average chord.
   - dividing the average chord by the span.
   - dividing the weight by the coefficient of lift.
   - dividing the weight by the coefficient of drag.

5. Decreasing the angle of incidence at the wing tip is called:

   - wash-in.
   - wash-up.
   - wash-out.
   - wash-off.

6. Which of the following is not a wing-tip modification designed to increase lift / reduce drag?

   - Wing-tip fuel tanks.
   - Winglets.

Unofficial convenience copy of A-CR-CCP-804/PG-001, cached 2026-11-08 from https://app.cadets.gc.ca/cadet-publications/A-CR-CCP-804-PG-001/A-CR-CCP-804-PG-001.pdf.
Verify against the official publication.

- Drooping the wing tips.
- Wing fences.

7. Auxiliary airfoils that move out in front of the leading edge at high angles of attack are called:
   - slats.
   - flaps.
   - wing fences.
   - slots.

8. Passages built into the wing that affect the airflow in the same way as slats are called:
   - slats.
   - flaps.
   - wing fences.
   - slots.

9. The curvature of an airfoil is also called:
   - chord.
   - span.
   - rib.
   - camber.

10. What colour-coded arcs are found on the tachometer?
    - Green, orange, red.
    - Blue, red, green.
    - Green, yellow, red.
    - Black, white, red.

11. The altimeter is connected to both the pitot pressure source and the static pressure port.
    - True.
    - False.

12. Density errors in the ASI are caused by:
    - an increase in the temperature of the air as the density increases.
    - a decrease in the temperature of the air as the altitude decreases.
    - blockages of the pitot static system due to the density of the air.
    - a decrease in the density of the air as the altitude increases.

13. The CAS corrected for the compressibility factor is the:
    - CAS.
    - IAS.

Unofficial convenience copy of A-CR-CCP-804/PG-001, cached 2026-11-08 from https://app.cadets.gc.ca/cadet-publications/A-CR-CCP-804-PG-001/A-CR-CCP-804-PG-001.pdf.
Verify against the official publication.

- TAS.
- EAS.

14. When flying into an area with a relatively lower pressure, if the altimeter setting is not corrected, the altimeter will read:

- lower than the actual altitude.
- higher than the actual altitude.
- the correct altitude, provided that the pilot maintains a constant airspeed.
- the correct altitude, provided that the pilot maintains a constant angle of bank.

15. Density altitude is:

- the altitude displayed on the altimeter when it is set to 29.92 inches of mercury.
- the actual height above Earth's surface.
- the pressure altitude corrected for temperature.
- the pressure altitude corrected for absolute errors.

16. The VSI measures the rate of change of the static pressure and indicates if the altitude is increasing or decreasing.

- True.
- False.

17. Precession is:

- the tendency of a rotating body, when a force is applied perpendicular to its plane of rotation, to turn in the direction of its rotation 90 degrees to its axis and take up a new plane of rotation parallel to the force applied.
- the tendency of a rotating object to remain in its plane of rotation.
- the tendency of a rotating body, when a force is applied parallel to its plane of rotation, to turn in the direction of its rotation 90 degrees to its axis and take up a new plane of rotation perpendicular to the force applied.
- the tendency of a rotating object to move from its plane of rotation.

18. The Mach number is calculated by:

- dividing the speed of sound by the airspeed.
- multiplying the speed of sound by the airspeed.
- dividing the airspeed by the speed of sound.
- multiplying the airspeed by the speed of sound and adding the inverse of the Mach index.

19. What does the fuel selector valve, used by the pilot, do?

- Transfer fuel.
- Select desired fuel tank to draw fuel.

Unofficial convenience copy of A-CR-CCP-804/PG-001, cached 2026-11-08 from https://app.cadets.gc.ca/cadet-publications/A-CR-CCP-804-PG-001/A-CR-CCP-804-PG-001.pdf.
Verify against the official publication.

- Shut off the flow of fuel from the tanks.
- Both B and C.

20. Forward movement of the throttle closes the throttle valve, which decreases the fuel / air mixture, and increases the power being produced by the engine.

- True.
- False.

21. Which two gauges measure the properties of the engine oil?

- Oil pressure and cylinder head temperature gauges.
- Oil temperature and outside air temperature gauges.
- Oil pressure and oil temperature gauges.
- Oil temperature and oil viscosity gauges.

22. What is maintained throughout most of the diameter of the propeller by means of the variation in airfoil sections and the angle of attack?

- Pitch.
- Drag.
- Thrust.
- Dihedral.

23. What is the distance a propeller travels forward in one revolution?

- Pitch.
- Drag.
- Thrust.
- Dihedral.

24. What reading will register on the manifold pressure gauge when the engine is not running?

- Engine power.
- Atmospheric pressure.
- Air temperature.
- Compression pressure.

25. What occurs to an engine as the altitude increases and the air becomes less dense?

- Power increases.
- Power remains stable.
- Power decreases.
- Engine stops.

Unofficial convenience copy of A-CR-CCP-804/PG-001, cached 2026-11-08 from https://app.cadets.gc.ca/cadet-publications/A-CR-CCP-804-PG-001/A-CR-CCP-804-PG-001.pdf.
Verify against the official publication.

26. What effect does surface friction have on winds?

- None.
- It causes winds to back and veer.
- It causes an increase in wind speeds.
- It causes lower wind speeds than would be expected from the pressure gradient.

27. An air mass is a large section of the troposphere with uniform properties of _____ and _____ in the _____.

- temperature, pressure, horizontal.
- pressure, moisture, horizontal.
- temperature, moisture, horizontal.
- temperature, moisture, vertical.

28. A katabatic wind:

- is the term for down slope winds flowing from high elevations down the slopes to valleys below.
- is the term for up slope winds flowing from valleys up the slopes to high elevations above.
- is the term for winds flowing from land to large bodies of water.
- is the term for winds flowing from large bodies of water to land.

29. An anabatic wind:

- is the term for down slope winds flowing from high elevations down the slopes to valleys below.
- is the term for up slope winds flowing from valleys up the slopes to high elevations above.
- is the term for winds flowing from land to large bodies of water.
- is the term for winds flowing from large bodies of water to land.

30. A gust is:

- a gradual change of wind direction associated with a change in altitude.
- a rapid and irregular change of wind speed.
- a regular and predictable change of wind speed.
- not considered important when learning about meteorology.

31. The three main factors that determine the weather in an air mass are:

- the moisture content, the temperature, and the stability of the air.
- the presence of condensation nuclei, the ambient pressure, and the altitude of the isothermal layer.
- the moisture content, the cooling process, and the altitude of the isothermal layer.
- the moisture content, the cooling process, and the stability of the air.

Unofficial convenience copy of A-CR-CCP-804/PG-001, cached 2026-11-08 from https://app.cadets.gc.ca/cadet-publications/A-CR-CCP-804-PG-001/A-CR-CCP-804-PG-001.pdf.
Verify against the official publication.

32. In stable air:

- stratus cloud and poor visibility are common.
- cumulus cloud and good visibility are common.

33. In unstable air:

- stratus cloud and poor visibility are common.
- cumulus cloud and good visibility are common.

34. A _____ air mass is more dense and therefore _____, undercutting a _____ air mass which will _____ over the cold air.

- warm, sinks, cold, ascend.
- cold, sinks, warm, ascend.
- cold, ascends, warm, sink.
- warm, ascends, cold, sink.

35. The shortest distance between two points on the surface of the Earth is represented by:

- a rhumb line.
- true heading.
- magnetic meridian.
- a great circle.

36. The angle between true heading and magnetic heading is:

- variation.
- magnetic dip.
- deviation.
- turning error.

37. A compass heading is:

- magnetic heading minus west deviation.
- magnetic heading plus west deviation.
- true heading minus west deviation.
- true heading plus west deviation.

38. Lines drawn on a chart joining places having the same variation are:

- isobaric lines.
- isogonic lines.
- agonic lines.
- rhumb lines.

Unofficial convenience copy of A-CR-CCP-804/PG-001, cached 2026-11-08 from https://app.cadets.gc.ca/cadet-publications/A-CR-CCP-804-PG-001/A-CR-CCP-804-PG-001.pdf.
Verify against the official publication.

39. On east and west headings, deceleration causes the compass to register a turn toward:

- north.
- south.
- east.
- west.

40. Meridians of longitude are:

- measured from 0–90 degrees east and west of the prime meridian.
- semi-great circles joining the geographic poles of the Earth.
- measured in hours, minutes, and seconds.
- all of the above.

41. Parallels of latitude are:

- circles on the Earth's surface that lie parallel to the equator.
- measured from 0–90 degrees north and south of the equator.
- measured in degrees, minutes, and seconds.
- all of the above.

42. The advantage of the rhumb line route is:

- it is the shortest distance between two points on the surface of the Earth.
- it can be followed at higher altitudes than great circle routes.
- the direction is constant, allowing a navigator to follow a constant heading.
- it is the most fuel-efficient route, especially when travelling from east to west.

43. Lines joining places of zero magnetic variation are:

- agonic lines.
- isogonic lines.
- isobar lines.
- lines of longitude.

Unofficial convenience copy of A-CR-CCP-804/PG-001, cached 2026-11-08 from https://app.cadets.gc.ca/cadet-publications/A-CR-CCP-804-PG-001/A-CR-CCP-804-PG-001.pdf.
Verify against the official publication.

Part B–Diagrams (7 points)

- Label the following parts on the diagram below.
  - Left tank
  - Right tank
  - Vent
  - Selector valve
  - Primer
  - Strainer
  - Carburetor

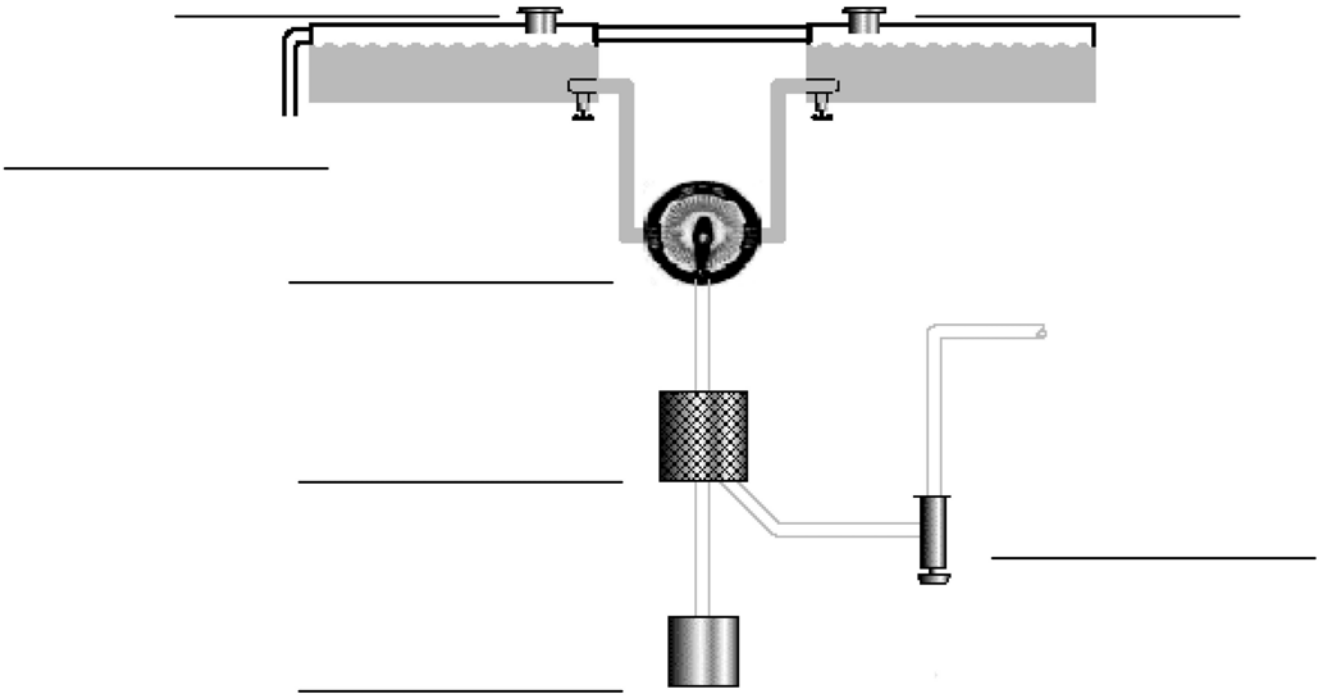

This form shall be reproduced locally.

Unofficial convenience copy of A-CR-CCP-804/PG-001, cached 2026-11-08 from https://app.cadets.gc.ca/cadet-publications/A-CR-CCP-804-PG-001/A-CR-CCP-804-PG-001.pdf.
Verify against the official publication.

AVIATION SUBJECTS–COMBINED ASSESSMENT PC

ANSWER KEY

Part A–Multiple Choice (43 points)

1. The very thin layer of air lying over the surface of the wing is called the _____ layer.

   - transition.
   - **boundary.**
   - turbulent.
   - laminar.

2. Conventional airfoils are generally the thickest at _____ percent of the chord.

   - 15.
   - **25.**
   - 50.
   - 65.

3. Laminar flow airfoils reduce drag by maintaining the _____ flow of air throughout a greater percentage of the _____.

   - turbulent, chord.
   - turbulent, span.
   - **laminar, chord.**
   - laminar, span.

4. Aspect ratio is calculated by:

   - **dividing the span by the average chord.**
   - dividing the average chord by the span.
   - dividing the weight by the coefficient of lift.
   - dividing the weight by the coefficient of drag.

5. Decreasing the angle of incidence at the wing tip is called:

   - wash-in.
   - wash-up.
   - **wash-out.**
   - wash-off.

6. Which of the following is not a wing-tip modification designed to increase lift / reduce drag?

   - Wing-tip fuel tanks.
   - Winglets.

Unofficial convenience copy of A-CR-CCP-804/PG-001, cached 2026-11-08 from https://app.cadets.gc.ca/cadet-publications/A-CR-CCP-804-PG-001/A-CR-CCP-804-PG-001.pdf.
Verify against the official publication.

- Drooping the wing tips.
- **Wing fences.**

7. Auxiliary airfoils that move out in front of the leading edge at high angles of attack are called:
   - **slats.**
   - flaps.
   - wing fences.
   - slots.

8. Passages built into the wing that affect the airflow in the same way as slats are called:
   - slats.
   - flaps.
   - wing fences.
   - **slots.**

9. The curvature of an airfoil is also called:
   - chord.
   - span.
   - rib.
   - **camber.**

10. What colour-coded arcs are found on the tachometer?
    - Green, orange, red.
    - Blue, red, green.
    - **Green, yellow, red.**
    - Black, white, red.

11. The altimeter is connected to both the pitot pressure source and the static pressure port.
    - True.
    - **False.**

12. Density errors in the ASI are caused by:
    - an increase in the temperature of the air as the density increases.
    - a decrease in the temperature of the air as the altitude decreases.
    - blockages of the pitot static system due to the density of the air.
    - **a decrease in the density of the air as the altitude increases.**

13. The CAS corrected for the compressibility factor is the:
    - CAS.
    - IAS.

Unofficial convenience copy of A-CR-CCP-804/PG-001, cached 2026-11-08 from https://app.cadets.gc.ca/cadet-publications/A-CR-CCP-804-PG-001/A-CR-CCP-804-PG-001.pdf.
Verify against the official publication.

- TAS.
- **EAS.**

14. When flying into an area with a relatively lower pressure, if the altimeter setting is not corrected, the altimeter will read:

- lower than the actual altitude.
- **higher than the actual altitude.**
- the correct altitude, provided that the pilot maintains a constant airspeed.
- the correct altitude, provided that the pilot maintains a constant angle of bank.

15. Density altitude is:

- the altitude displayed on the altimeter when it is set to 29.92 inches of mercury.
- the actual height above Earth's surface.
- **the pressure altitude corrected for temperature.**
- the pressure altitude corrected for absolute errors.

16. The VSI measures the rate of change of the static pressure and indicates if the altitude is increasing or decreasing.

- **True.**
- False.

17. Precession is:

- **the tendency of a rotating body, when a force is applied perpendicular to its plane of rotation, to turn in the direction of its rotation 90 degrees to its axis and take up a new plane of rotation parallel to the force applied.**
- the tendency of a rotating object to remain in its plane of rotation.
- the tendency of a rotating body, when a force is applied parallel to its plane of rotation, to turn in the direction of its rotation 90 degrees to its axis and take up a new plane of rotation perpendicular to the force applied.
- the tendency of a rotating object to move from its plane of rotation.

18. The Mach number is calculated by:

- dividing the speed of sound by the airspeed.
- multiplying the speed of sound by the airspeed.
- **dividing the airspeed by the speed of sound.**
- multiplying the airspeed by the speed of sound and adding the inverse of the Mach index.

19. What does the fuel selector valve, used by the pilot, do?

- Transfer fuel.
- Select desired fuel tank to draw fuel.

Unofficial convenience copy of A-CR-CCP-804/PG-001, cached 2026-11-08 from https://app.cadets.gc.ca/cadet-publications/A-CR-CCP-804-PG-001/A-CR-CCP-804-PG-001.pdf.
Verify against the official publication.

- Shut off the flow of fuel from the tanks.
- **Both B and C.**

20. Forward movement of the throttle closes the throttle valve, which decreases the fuel / air mixture, and increases the power being produced by the engine.

- True.
- **False.**

21. Which two gauges measure the properties of the engine oil?

- Oil pressure and cylinder head temperature gauges.
- Oil temperature and outside air temperature gauges.
- **Oil pressure and oil temperature gauges.**
- Oil temperature and oil viscosity gauges.

22. What is maintained throughout most of the diameter of the propeller by means of the variation in airfoil sections and the angle of attack?

- Pitch.
- Drag.
- **Thrust.**
- Dihedral.

23. What is the distance a propeller travels forward in one revolution?

- **Pitch.**
- Drag.
- Thrust.
- Dihedral.

24. What reading will register on the manifold pressure gauge when the engine is not running?

- Engine power.
- **Atmospheric pressure.**
- Air temperature.
- Compression pressure.

25. What occurs to an engine as the altitude increases and the air becomes less dense?

- Power increases.
- Power remains stable.
- **Power decreases.**
- Engine stops.

Unofficial convenience copy of A-CR-CCP-804/PG-001, cached 2026-11-08 from https://app.cadets.gc.ca/cadet-publications/A-CR-CCP-804-PG-001/A-CR-CCP-804-PG-001.pdf.
Verify against the official publication.

26. What effect does surface friction have on winds?

- None.
- It causes winds to back and veer.
- It causes an increase in wind speeds.
- **It causes lower wind speeds than would be expected from the pressure gradient.**

27. An air mass is a large section of the troposphere with uniform properties of _____ and _____ in the _____.

- temperature, pressure, horizontal
- pressure, moisture, horizontal
- **temperature, moisture, horizontal**
- temperature, moisture, vertical

28. A katabatic wind:

- **is the term for down slope winds flowing from high elevations down the slopes to valleys below.**
- is the term for up slope winds flowing from valleys up the slopes to high elevations above.
- is the term for winds flowing from land to large bodies of water.
- is the term for winds flowing from large bodies of water to land.

29. An anabatic wind:

- is the term for down slope winds flowing from high elevations down the slopes to valleys below.
- **is the term for up slope winds flowing from valleys up the slopes to high elevations above.**
- is the term for winds flowing from land to large bodies of water.
- is the term for winds flowing from large bodies of water to land.

30. A gust is:

- a gradual change of wind direction associated with a change in altitude.
- **a rapid and irregular change of wind speed.**
- a regular and predictable change of wind speed.
- not considered important when learning about meteorology.

31. The three main factors that determine the weather in an air mass are:

- the moisture content, the temperature, and the stability of the air.
- the presence of condensation nuclei, the ambient pressure, and the altitude of the isothermal layer.
- the moisture content, the cooling process, and the altitude of the isothermal layer.
- **the moisture content, the cooling process, and the stability of the air.**

Unofficial convenience copy of A-CR-CCP-804/PG-001, cached 2026-11-08 from https://app.cadets.gc.ca/cadet-publications/A-CR-CCP-804-PG-001/A-CR-CCP-804-PG-001.pdf.
Verify against the official publication.

32. In stable air:

- **stratus cloud and poor visibility are common.**
- cumulus cloud and good visibility are common.

33. In unstable air:

- stratus cloud and poor visibility are common.
- **cumulus cloud and good visibility are common.**

34. A _____ air mass is more dense and therefore _____, undercutting a _____ air mass which will _____ over the cold air.

- warm, sinks, cold, ascend.
- **cold, sinks, warm, ascend.**
- cold, ascends, warm, sink.
- warm, ascends, cold, sink.

35. The shortest distance between two points on the surface of the Earth is represented by:

- a rhumb line.
- true heading.
- magnetic meridian.
- **a great circle.**

36. The angle between true heading and magnetic heading is:

- **variation.**
- magnetic dip.
- deviation.
- turning error.

37. A compass heading is:

- magnetic heading minus west deviation.
- **magnetic heading plus west deviation.**
- true heading minus west deviation.
- true heading plus west deviation.

38. Lines drawn on a chart joining places having the same variation are:

- isobaric lines.
- **isogonic lines.**
- agonic lines.
- rhumb lines.

Unofficial convenience copy of A-CR-CCP-804/PG-001, cached 2026-11-08 from https://app.cadets.gc.ca/cadet-publications/A-CR-CCP-804-PG-001/A-CR-CCP-804-PG-001.pdf.
Verify against the official publication.

39. On east and west headings, deceleration causes the compass to register a turn toward:

- north.
- **south.**
- east.
- west.

40. Meridians of longitude are:

- measured from 0–90 degrees east and west of the prime meridian.
- **semi-great circles joining the geographic poles of the Earth.**
- measured in hours, minutes, and seconds.
- all of the above.

41. Parallels of latitude are:

- circles on the Earth's surface that lie parallel to the equator.
- measured from 0–90 degrees north and south of the equator.
- measured in degrees, minutes, and seconds.
- **all of the above.**

42. The advantage of the rhumb line route is:

- it is the shortest distance between two points on the surface of the Earth.
- it can be followed at higher altitudes than great circle routes.
- **the direction is constant, allowing a navigator to follow a constant heading.**
- it is the most fuel-efficient route, especially when travelling from east to west.

43. Lines joining places of zero magnetic variation are:

- **agonic lines.**
- isogonic lines.
- isobar lines.
- lines of longitude.

Unofficial convenience copy of A-CR-CCP-804/PG-001, cached 2026-11-08 from https://app.cadets.gc.ca/cadet-publications/A-CR-CCP-804-PG-001/A-CR-CCP-804-PG-001.pdf.
Verify against the official publication.

Part B–Diagrams (7 points)

1. Label the following parts on the diagram below.

    a. Left tank

    b. Right tank

    c. Vent

    d. Selector valve

    e. Primer

    f. Strainer

    g. Carburetor

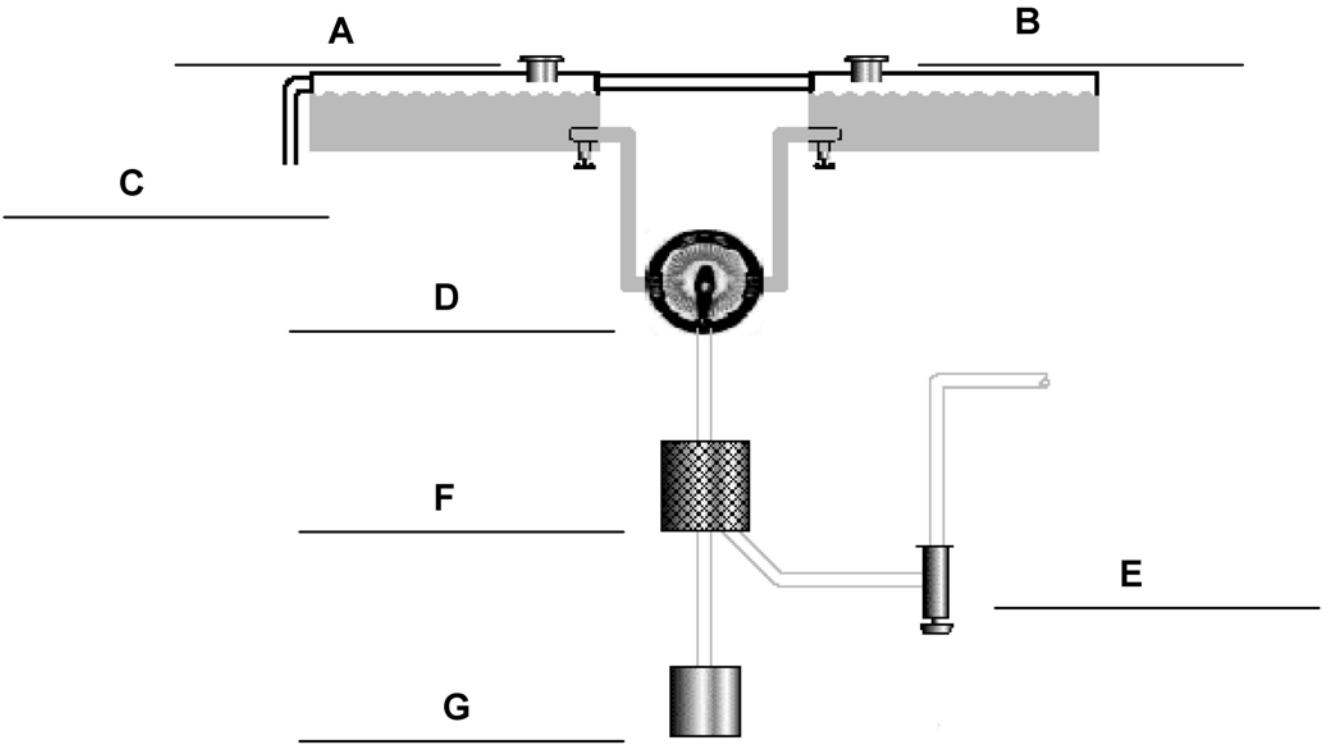

Unofficial convenience copy of A-CR-CCP-804/PG-001, cached 2026-11-08 from https://app.cadets.gc.ca/cadet-publications/A-CR-CCP-804-PG-001/A-CR-CCP-804-PG-001.pdf.
Verify against the official publication.

AVIATION SUBJECTS–COMBINED ASSESSMENT PC

REWRITE

Cadet's Name: _____ Date: _____

Part A–Multiple Choice (45 points)

1. Laminar airfoils are generally the thickest at _____ percent of the chord.

   - 15.
   - 25.
   - 50.
   - 65.

2. Laminar flow airfoils reduce drag by maintaining the _____ flow of air throughout a greater percentage of the _____.

   - turbulent, chord.
   - turbulent, span.
   - laminar, chord.
   - laminar, span.

3. Aspect ratio is calculated by:

   - dividing the span by the average chord.
   - dividing the average chord by the span.
   - dividing the weight by the coefficient of lift.
   - dividing the weight by the coefficient of drag.

4. Increasing the angle of incidence at the wing tip is called:

   - wash-in.
   - wash-up.
   - wash-out.
   - wash-off.

5. Which of the following is not a wing-tip modification designed to increase lift / reduce drag?

   - Wing-tip fuel tanks.
   - Winglets.
   - Drooping the wing tips.
   - Wing fences.

Unofficial convenience copy of A-CR-CCP-804/PG-001, cached 2026-11-08 from https://app.cadets.gc.ca/cadet-publications/A-CR-CCP-804-PG-001/A-CR-CCP-804-PG-001.pdf.
Verify against the official publication.

6. Auxiliary airfoils that move out in front of the leading edge at high angles of attack are called:
   - slats.
   - flaps.
   - wing fences.
   - slots.

7. Passages built into the wing that affect the airflow in the same way as slats are called:
   - slats.
   - flaps.
   - wing fences.
   - slots.

8. In addition to creating lift, flaps also create:
   - thrust.
   - weight.
   - trim.
   - drag.

9. The curvature of an airfoil is also called:
   - chord.
   - span.
   - rib.
   - camber.

10. Pitot pressure is the atmospheric pressure outside the aircraft, not affected by turbulence or motion.
    - True.
    - False.

11. The ASI is connected to both the pitot pressure source and the static pressure port.
    - True.
    - False.

12. Density errors in the ASI are caused by:
    - an increase in the temperature of the air as the density increases.
    - a decrease in the temperature of the air as the altitude decreases.
    - blockages of the pitot static system due to the density of the air.
    - a decrease in the density of the air as the altitude increases.

Unofficial convenience copy of A-CR-CCP-804/PG-001, cached 2026-11-08 from https://app.cadets.gc.ca/cadet-publications/A-CR-CCP-804-PG-001/A-CR-CCP-804-PG-001.pdf.
Verify against the official publication.

13. The IAS corrected for instrument and position errors is the:

- CAS.
- IAS.
- TAS.
- EAS.

14. When flying into an area with a relatively higher pressure, if the altimeter setting is not corrected, the altimeter will read:

- lower than the actual altitude.
- higher than the actual altitude.
- the correct altitude, provided that the pilot maintains a constant airspeed.
- the correct altitude, provided that the pilot maintains a constant angle of bank.

15. Density altitude is:

- the altitude displayed on the altimeter when it is set to 29.92 inches of mercury.
- the actual height above Earth's surface.
- the pressure altitude corrected for temperature.
- the pressure altitude corrected for absolute errors.

16. The VSI measures the rate of change of the pitot pressure and indicates if the altitude is increasing or decreasing.

- True.
- False.

17. Gyroscopic inertia is also known as:

- precession.
- rigidity in space.
- fluidity in space.
- rotation.

18. Precession is:

- the tendency of a rotating body, when a force is applied perpendicular to its plane of rotation, to turn in the direction of its rotation 90 degrees to its axis and take up a new plane of rotation parallel to the force applied.
- the tendency of a rotating object to remain in its plane of rotation.
- the tendency of a rotating body, when a force is applied parallel to its plane of rotation, to turn in the direction of its rotation 90 degrees to its axis and take up a new plane of rotation perpendicular to the force applied.
- the tendency of a rotating object to move from its plane of rotation.

Unofficial convenience copy of A-CR-CCP-804/PG-001, cached 2026-11-08 from https://app.cadets.gc.ca/cadet-publications/A-CR-CCP-804-PG-001/A-CR-CCP-804-PG-001.pdf.
Verify against the official publication.

19. Where should the fuel tank be positioned in a gravity feed system?

- Above the carburetor.
- Below the carburetor.
- In-line with the carburetor.
- Below the centre of gravity.

20. What does the fuel selector valve, used by the pilot, do?

- Transfer fuel.
- Select desired fuel tank to draw fuel.
- Shut off the flow of fuel from the tanks.
- Both B and C.

21. Forward movement of the throttle opens the throttle valve, which increases the fuel / air mixture, and increases the power being produced by the engine.

- True.
- False.

22. Which two gauges measure the properties of the engine oil?

- Oil pressure and cylinder head temperature gauges.
- Oil temperature and outside air temperature gauges.
- Oil pressure and oil temperature gauges.
- Oil temperature and oil viscosity gauges.

23. What is maintained throughout most of the diameter of the propeller by means of the variation in airfoil sections and the angle of attack?

- Pitch.
- Drag.
- Thrust.
- Dihedral.

24. What is the distance a propeller travels forward in one revolution?

- Pitch.
- Drag.
- Thrust.
- Dihedral.

25. What colour-coded arcs are found on the tachometer?

- Green, orange, red.
- Blue, red, green.

Unofficial convenience copy of A-CR-CCP-804/PG-001, cached 2026-11-08 from https://app.cadets.gc.ca/cadet-publications/A-CR-CCP-804-PG-001/A-CR-CCP-804-PG-001.pdf.
Verify against the official publication.

- Green, yellow, red.
- Black, white, red.

26. What reading will register on the manifold pressure gauge when the engine is not running?

- Engine power.
- Atmospheric pressure.
- Air temperature.
- Compression pressure.

27. What occurs to an engine as the altitude increases and the air becomes less dense?

- Power increases.
- Power remains stable.
- Power decreases.
- Engine stops.

28. What effect does surface friction have on winds?

- None.
- It causes winds to back and veer.
- It causes an increase in wind speeds.
- It causes lower wind speeds than would be expected from the pressure gradient.

29. An air mass is a large section of the troposphere with uniform properties of _____ and _____ in the _____.

- temperature, pressure, horizontal.
- pressure, moisture, horizontal.
- temperature, moisture, horizontal.
- temperature, moisture, vertical.

30. A katabatic wind:

- is the term for down slope winds flowing from high elevations down the slopes to valleys below.
- is the term for up slope winds flowing from valleys up the slopes to high elevations above.
- is the term for winds flowing from land to large bodies of water.
- is the term for winds flowing from large bodies of water to land.

31. An anabatic wind:

- is the term for down slope winds flowing from high elevations down the slopes to valleys below.
- is the term for up slope winds flowing from valleys up the slopes to high elevations above.
- is the term for winds flowing from land to large bodies of water.
- is the term for winds flowing from large bodies of water to land.

Unofficial convenience copy of A-CR-CCP-804/PG-001, cached 2026-11-08 from https://app.cadets.gc.ca/cadet-publications/A-CR-CCP-804-PG-001/A-CR-CCP-804-PG-001.pdf.
Verify against the official publication.

32. A gust is:

- a gradual change of wind direction associated with a change in altitude.
- a rapid and irregular change of wind speed.
- a regular and predictable change of wind speed.
- not considered important when learning about meteorology.

33. The three main factors that determine the weather in an air mass are:

- the moisture content, the temperature, and the stability of the air.
- the presence of condensation nuclei, the ambient pressure, and the altitude of the isothermal layer.
- the moisture content, the cooling process, and the altitude of the isothermal layer.
- the moisture content, the cooling process, and the stability of the air.

34. In stable air:

- stratus cloud and poor visibility are common.
- cumulus cloud and good visibility are common.

35. In unstable air:

- stratus cloud and poor visibility are common.
- cumulus cloud and good visibility are common.

36. A _____ air mass is more dense and therefore _____, undercutting a _____ air mass which will _____ over the cold air.

- warm, sinks, cold, ascend.
- cold, sinks, warm, ascend.
- cold, ascends, warm, sink.
- warm, ascends, cold, sink.

37. The shortest distance between two points on the surface of the Earth is represented by:

- a rhumb line.
- true heading.
- magnetic meridian.
- a great circle.

38. The angle between true heading and magnetic heading is:

- variation.
- magnetic dip.
- deviation.
- turning error.

Unofficial convenience copy of A-CR-CCP-804/PG-001, cached 2026-11-08 from https://app.cadets.gc.ca/cadet-publications/A-CR-CCP-804-PG-001/A-CR-CCP-804-PG-001.pdf.
Verify against the official publication.

39. On turns from south, northerly-turning error causes the compass to:
    - lead.
    - indicate correctly.
    - lag.
    - none of the above.

40. Lines drawn on a chart joining places having the same variation are:
    - isobaric lines.
    - isogonic lines.
    - agonic lines.
    - rhumb lines.

41. Meridians of longitude are:
    - measured from 0–90 degrees east and west of the prime meridian.
    - semi-great circles joining the geographic poles of the Earth.
    - measured in hours, minutes, and seconds.
    - all of the above.

42. Parallels of latitude are:
    - circles on the Earth's surface that lie parallel to the equator.
    - measured from 0–90 degrees north and south of the equator.
    - measured in degrees, minutes, and seconds.
    - all of the above.

43. The advantage of a great circle route is:
    - it is the shortest distance between two points on the surface of the Earth.
    - it can be followed at higher altitudes than great circle routes.
    - the direction is constant, allowing a navigator to follow a constant heading.
    - it is the most fuel-efficient route, especially when travelling from east to west.

44. The lubber line is:
    - a painted white line that indicates the direction the airplane is heading.
    - in line with or parallel to the longitudinal axis of the airplane.
    - the location at which the compass card is read.
    - all of the above.

45. What is your heading (in degrees) if you are flying northeast?
    - 45 degrees.
    - 135 degrees.

Unofficial convenience copy of A-CR-CCP-804/PG-001, cached 2026-11-08 from https://app.cadets.gc.ca/cadet-publications/A-CR-CCP-804-PG-001/A-CR-CCP-804-PG-001.pdf.
Verify against the official publication.

- 225 degrees.
- 315 degrees.

Part B–Matching (5 points)

1. Label the following parts on the propeller diagram below.

    - Thrust
    - Relative airflow
    - Resultant
    - Axis of rotation
    - Torque force

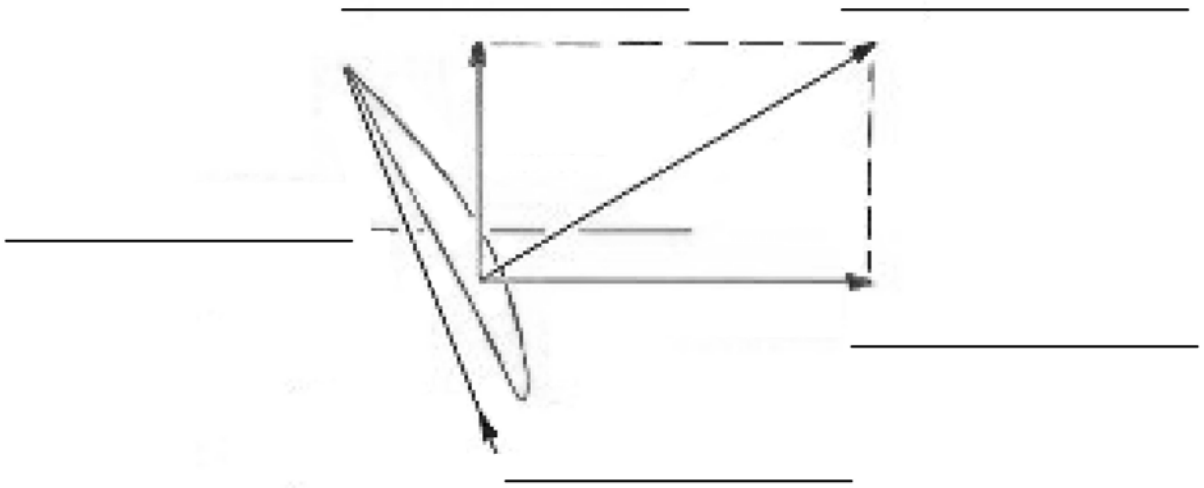

This form shall be reproduced locally.

Unofficial convenience copy of A-CR-CCP-804/PG-001, cached 2026-11-08 from https://app.cadets.gc.ca/cadet-publications/A-CR-CCP-804-PG-001/A-CR-CCP-804-PG-001.pdf.
Verify against the official publication.

AVIATION SUBJECTS–COMBINED ASSESSMENT PC

REWRITE ANSWER KEY

Part A–Multiple Choice (45 points)

1. Laminar airfoils are generally the thickest at _____ percent of the chord.

   - 15.
   - 25.
   - **50.**
   - 65.

2. Laminar flow airfoils reduce drag by maintaining the _____ flow of air throughout a greater percentage of the _____.

   - turbulent, chord.
   - turbulent, span.
   - **laminar, chord.**
   - laminar, span.

3. Aspect ratio is calculated by:

   - **dividing the span by the average chord.**
   - dividing the average chord by the span.
   - dividing the weight by the coefficient of lift.
   - dividing the weight by the coefficient of drag.

4. Increasing the angle of incidence at the wing tip is called:

   - **wash-in.**
   - wash-up.
   - wash-out.
   - wash-off.

5. Which of the following is not a wing-tip modification designed to increase lift / reduce drag?

   - Wing-tip fuel tanks.
   - Winglets.
   - Drooping the wing tips.
   - **Wing fences.**

6. Auxiliary airfoils that move out in front of the leading edge at high angles of attack are called:

   - **slats.**
   - flaps.

Unofficial convenience copy of A-CR-CCP-804/PG-001, cached 2026-11-08 from https://app.cadets.gc.ca/cadet-publications/A-CR-CCP-804-PG-001/A-CR-CCP-804-PG-001.pdf.
Verify against the official publication.

- wing fences.
- slots.

7. Passages built into the wing that affect the airflow in the same way as slats are called:
   - slats.
   - flaps.
   - wing fences.
   - **slots.**

8. In addition to creating lift, flaps also create:
   - thrust.
   - weight.
   - trim.
   - **drag.**

9. The curvature of an airfoil is also called:
   - chord.
   - span.
   - rib.
   - **camber.**

10. Pitot pressure is the atmospheric pressure outside the aircraft, not affected by turbulence or motion.
    - True.
    - **False.**

11. The ASI is connected to both the pitot pressure source and the static pressure port.
    - **True.**
    - False.

12. Density errors in the ASI are caused by:
    - an increase in the temperature of the air as the density increases.
    - a decrease in the temperature of the air as the altitude decreases.
    - blockages of the pitot static system due to the density of the air.
    - **a decrease in the density of the air as the altitude increases.**

13. The IAS corrected for instrument and position errors is the:
    - **CAS.**
    - IAS.
    - TAS.
    - EAS.

Unofficial convenience copy of A-CR-CCP-804/PG-001, cached 2026-11-08 from https://app.cadets.gc.ca/cadet-publications/A-CR-CCP-804-PG-001/A-CR-CCP-804-PG-001.pdf.
Verify against the official publication.

14. When flying into an area with a relatively higher pressure, if the altimeter setting is not corrected, the altimeter will read:

- **lower than the actual altitude.**
- higher than the actual altitude.
- the correct altitude, provided that the pilot maintains a constant airspeed.
- the correct altitude, provided that the pilot maintains a constant angle of bank.

15. Density altitude is:

- the altitude displayed on the altimeter when it is set to 29.92 inches of mercury.
- the actual height above Earth's surface.
- **the pressure altitude corrected for temperature.**
- the pressure altitude corrected for absolute errors.

16. The VSI measures the rate of change of the pitot pressure and indicates if the altitude is increasing or decreasing.

- True.
- **False.**

17. Gyroscopic inertia is also known as:

- precession.
- **rigidity in space.**
- fluidity in space.
- rotation.

18. Precession is:

- **the tendency of a rotating body, when a force is applied perpendicular to its plane of rotation, to turn in the direction of its rotation 90 degrees to its axis and take up a new plane of rotation parallel to the force applied.**
- the tendency of a rotating object to remain in its plane of rotation.
- the tendency of a rotating body, when a force is applied parallel to its plane of rotation, to turn in the direction of its rotation 90 degrees to its axis and take up a new plane of rotation perpendicular to the force applied.
- the tendency of a rotating object to move from its plane of rotation.

19. Where should the fuel tank be positioned in a gravity feed system?

- **Above the carburetor.**
- Below the carburetor.
- In-line with the carburetor.
- Below the centre of gravity.

Unofficial convenience copy of A-CR-CCP-804/PG-001, cached 2026-11-08 from https://app.cadets.gc.ca/cadet-publications/A-CR-CCP-804-PG-001/A-CR-CCP-804-PG-001.pdf.
Verify against the official publication.

20. What does the fuel selector valve, used by the pilot, do?

- Transfer fuel.
- Select desired fuel tank to draw fuel.
- Shut off the flow of fuel from the tanks.
- **Both B and C.**

21. Forward movement of the throttle opens the throttle valve, which increases the fuel / air mixture, and increases the power being produced by the engine.

- **True.**
- False.

22. Which two gauges measure the properties of the engine oil?

- Oil pressure and cylinder head temperature gauges.
- Oil temperature and outside air temperature gauges.
- **Oil pressure and oil temperature gauges.**
- Oil temperature and oil viscosity gauges.

23. What is maintained throughout most of the diameter of the propeller by means of the variation in airfoil sections and the angle of attack?

- Pitch.
- Drag.
- **Thrust.**
- Dihedral.

24. What is the distance a propeller travels forward in one revolution?

- **Pitch.**
- Drag.
- Thrust.
- Dihedral.

25. What colour-coded arcs are found on the tachometer?

- Green, orange, red.
- Blue, red, green.
- **Green, yellow, red.**
- Black, white, red.

26. What reading will register on the manifold pressure gauge when the engine is not running?

- Engine power.
- **Atmospheric pressure.**

Unofficial convenience copy of A-CR-CCP-804/PG-001, cached 2026-11-08 from https://app.cadets.gc.ca/cadet-publications/A-CR-CCP-804-PG-001/A-CR-CCP-804-PG-001.pdf.
Verify against the official publication.

- Air temperature.
- Compression pressure.

27. What occurs to an engine as the altitude increases and the air becomes less dense?

- Power increases.
- Power remains stable.
- **Power decreases.**
- Engine stops.

28. What effect does surface friction have on winds?

- None.
- It causes winds to back and veer.
- It causes an increase in wind speeds.
- **It causes lower wind speeds than would be expected from the pressure gradient.**

29. An air mass is a large section of the troposphere with uniform properties of _____ and _____ in the _____.

- temperature, pressure, horizontal.
- pressure, moisture, horizontal.
- **temperature, moisture, horizontal.**
- temperature, moisture, vertical.

30. A katabatic wind:

- **is the term for down slope winds flowing from high elevations down the slopes to valleys below.**
- is the term for up slope winds flowing from valleys up the slopes to high elevations above.
- is the term for winds flowing from land to large bodies of water.
- is the term for winds flowing from large bodies of water to land.

31. An anabatic wind:

- is the term for down slope winds flowing from high elevations down the slopes to valleys below.
- **is the term for up slope winds flowing from valleys up the slopes to high elevations above.**
- is the term for winds flowing from land to large bodies of water.
- is the term for winds flowing from large bodies of water to land.

32. A gust is:

- a gradual change of wind direction associated with a change in altitude.
- **a rapid and irregular change of wind speed.**
- a regular and predictable change of wind speed.
- not considered important when learning about meteorology.

Unofficial convenience copy of A-CR-CCP-804/PG-001, cached 2026-11-08 from https://app.cadets.gc.ca/cadet-publications/A-CR-CCP-804-PG-001/A-CR-CCP-804-PG-001.pdf.
Verify against the official publication.

33. The three main factors that determine the weather in an air mass are:

- the moisture content, the temperature, and the stability of the air.
- the presence of condensation nuclei, the ambient pressure, and the altitude of the isothermal layer.
- the moisture content, the cooling process, and the altitude of the isothermal layer.
- **the moisture content, the cooling process, and the stability of the air.**

34. In stable air:

- **stratus cloud and poor visibility are common.**
- cumulus cloud and good visibility are common.

35. In unstable air:

- stratus cloud and poor visibility are common.
- **cumulus cloud and good visibility are common.**

36. A _____ air mass is more dense and therefore _____, undercutting a _____ air mass which will _____ over the cold air.

- warm, sinks, cold, ascend.
- **cold, sinks, warm, ascend.**
- cold, ascends, warm, sink.
- warm, ascends, cold, sink.

37. The shortest distance between two points on the surface of the Earth is represented by:

- a rhumb line.
- true heading.
- magnetic meridian.
- **a great circle.**

38. The angle between true heading and magnetic heading is:

- **variation.**
- magnetic dip.
- deviation.
- turning error.

39. On turns from south, northerly-turning error causes the compass to:

- **lead.**
- indicate correctly.
- lag.
- none of the above.

Unofficial convenience copy of A-CR-CCP-804/PG-001, cached 2026-11-08 from https://app.cadets.gc.ca/cadet-publications/A-CR-CCP-804-PG-001/A-CR-CCP-804-PG-001.pdf.
Verify against the official publication.

40. Lines drawn on a chart joining places having the same variation are:
    - isobaric lines.
    - **isogonic lines.**
    - agonic lines.
    - rhumb lines.

41. Meridians of longitude are:
    - measured from 0–90 degrees east and west of the prime meridian.
    - **semi-great circles joining the geographic poles of the Earth.**
    - measured in hours, minutes, and seconds.
    - all of the above.

42. Parallels of latitude are:
    - circles on the Earth's surface that lie parallel to the equator.
    - measured from 0–90 degrees north and south of the equator.
    - measured in degrees, minutes, and seconds.
    - **all of the above.**

43. The advantage of a great circle route is:
    - **it is the shortest distance between two points on the surface of the Earth.**
    - it can be followed at higher altitudes than great circle routes.
    - the direction is constant, allowing a navigator to follow a constant heading.
    - it is the most fuel-efficient route, especially when travelling from east to west.

44. The lubber line is:
    - a painted white line that indicates the direction the airplane is heading.
    - in line with or parallel to the longitudinal axis of the airplane.
    - the location at which the compass card is read.
    - **all of the above.**

45. What is your heading (in degrees) if you are flying northeast?
    - **45 degrees.**
    - 135 degrees.
    - 225 degrees.
    - 315 degrees.

Unofficial convenience copy of A-CR-CCP-804/PG-001, cached 2026-11-08 from https://app.cadets.gc.ca/cadet-publications/A-CR-CCP-804-PG-001/A-CR-CCP-804-PG-001.pdf.
Verify against the official publication.

Part B–Matching (5 points)

1. Label the following parts on the propeller diagram below.

   - Thrust
   - Relative airflow
   - Resultant
   - Axis of rotation
   - Torque force

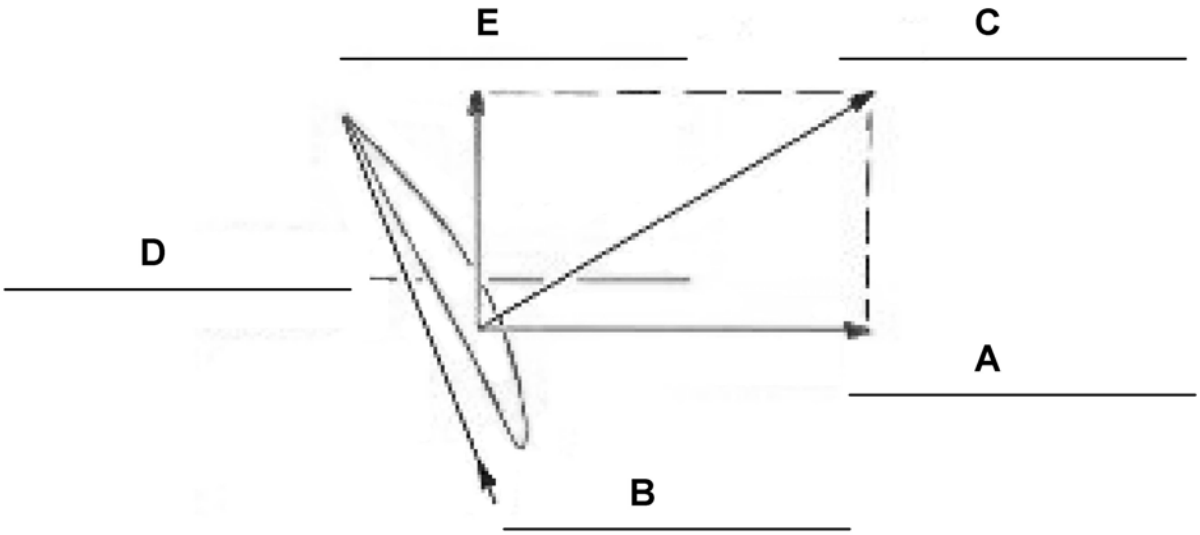

Unofficial convenience copy of A-CR-CCP-804/PG-001, cached 2026-11-08 from https://app.cadets.gc.ca/cadet-publications/A-CR-CCP-804-PG-001/A-CR-CCP-804-PG-001.pdf.
Verify against the official publication.