ANNEX B

ASSESSMENT OF LEARNING PLAN – PROFICIENCY LEVEL FOUR

EC / PC	Scope	Purpose	Target	Method	How	When	Resources	Limitations
PO 401 – Participate in Citizenship Activities								
X01 PC	PO X01	To have the cadet participate in a citizenship activity.	Nil.	Nil.	The cadet is observed participating in a minimum of one citizenship activity.	Anytime.	Nil.	Nil.
PO 402 – Perform Community Service								
X02 PC	PO X02	To have the cadet participate in community service.	Nil.	Nil.	The cadet is observed participating in a minimum of one community service activity.	Anytime.	Nil.	Nil.
PO 403 – Act as a Team Leader								
403 PC 01	PO 403	To assess the cadet's ability to act as a team leader during a leadership assignment.	Reasoning Proficiency and Skills	Performance Assessment and Personal Communication	The cadet is observed acting as a team leader during a leadership assignment.	Ongoing throughout the training year.	Chapter 3, Annex B, Appendix 1 leadership assignment checklist and rubric.	Nil.
403 PC 02	PO 403	To assess the cadet's ability to perform a leadership appointment, to include leading and mentoring a team of cadets over time.	Reasoning Proficiency and Skills	Performance Assessment and Personal Communication	The cadet is observed performing a leadership appointment, to include leading and mentoring a team of cadets over time.	Ongoing throughout the training year.	Chapter 3, Annex B, Appendix 1 leadership appointment checklist and rubric.	Nil.
PO X04 – Track Participation in Physical Activities								
404 PC	PO X04	To assess the cadet's participation in regular physical activity.	Reasoning Proficiency and Skills	Performance Assessment	The cadet's physical activity tracker is reviewed.	During EO MX04.02.	Chapter 3, Annex B, Appendix 2 and Physical Activity Tracker.	Nil.
PO X05 – Participate in Physical Activities								
X05 PC	PO X05	To have the cadet participate in physical activity.	Nil.	Nil.	The cadet is observed participating in a minimum of one physical activity.	Anytime.	Nil.	Nil.

Unofficial convenience copy of A-CR-CCP-804/PG-001, cached 2026-11-08 from https://app.cadets.gc.ca/cadet-publications/A-CR-CCP-804-PG-001/A-CR-CCP-804-PG-001.pdf. Verify against the official publication.

EC / PC	Scope	Purpose	Target	Method	How	When	Resources	Limitations
PO 406 – Fire the Cadet Air Rifle During Recreational Marksmanship								
406 PC	PO 406	To have the cadet participate recreational marksmanship.	Nil.	Nil.	The cadet is observed participating in a minimum of one recreational marksmanship activity.	Anytime.	Nil.	Nil.
PO 407 – Serve in an Air Cadet Squadron								
407 PC	PO 407	To have the cadet participate in Proficiency Level Four training.	Nil.	Nil.	The cadet is observed participating in a minimum of 60% of mandatory / complementary training.	Anytime.	Nil.	Nil.
PO 408 – Command a Flight on Parade								
408 PC	PO 408	To assess the cadet's ability to command a flight on parade.	Skills	Performance Assessment	The cadet is observed as they command a flight on parade by: identifying parade sequence and inspecting a cadet on parade.	During squadron parades.	Chapter 3, Annex B, Appendix 3 checklist.	Assistance is denied.
PO 409 – Instruct a Lesson								
409 PC	PO 409	To assess the cadet's ability to prepare and instruct a 30-minute lesson.	Reasoning proficiency and skills	Performance Assessment	The cadet's lesson plan is reviewed and they are observed while instructing a 30-minute lesson.	Ongoing during the conduct of lessons related to EO M409.05 or during any opportunity there after.	Chapter 3, Annex B, Appendix 4.	Assistance is denied.
PO 311 – Participate in a Recreational Summer Biathlon Activity								
Nil.								
PO X20 – Participate in CAF Familiarization Activities								
X20 PC	PO X20	To have the cadet participate in CAF familiarization.	Nil.	Nil.	The cadet is observed participating in a minimum of one CAF familiarization activity.	Anytime.	Nil.	Nil.
PO 429 – Communicate Using Radio Procedures for Aviation Transmission								
429 PC (*Note*: The cadet is not required to complete this PO to obtain the Proficiency Level Four qualification.)	PO 429	To assess the cadets' ability to master knowledge of radio subjects and qualify for the Industry Canada Restricted Operator Certificate With Aeronautical Qualification (ROC-A).	Knowledge Mastery	Selected Response	The cadet will write a performance check.	Upon completion of the lessons associated with PO 429.	Chapter 3, Annex B, Appendix 5 Written Test.	Oral assistance if required.
POs 431/432/436/437 (Aviation Subjects) – Combined Assessment								
431 432 436 437 PC	PO 431 PO 432 PO 436 PO 437	To assess the cadets' ability to master knowledge of aviation subjects.	Knowledge Mastery	Selected Response	The cadet will write a performance check.	Upon completion of the mandatory lessons associated with POs 431, 432, 436 and 437.	Chapter 3, Annex B, Appendix 6 Written Test.	Assistance is denied.

Unofficial convenience copy of A-CR-CCP-804/PG-001, cached 2026-11-08 from https://app.cadets.gc.ca/cadet-publications/A-CR-CCP-804-PG-001/A-CR-CCP-804-PG-001.pdf. Verify against the official publication.

EC / PC	Scope	Purpose	Target	Method	How	When	Resources	Limitations
PO 440 – Discuss Aerospace Structures								
440 PC	PO 440	To have the cadet participate in an aerospace activity.	Nil.	Nil.	The cadet is observed participating in an aerospace activity.	Anytime.	Nil.	Nil.
PO 460 – Describe Aerodrome Operations Career Opportunities								
Nil.								
PO 470 – Recognize Aspects of Aircraft Manufacturing and Maintenance								
Nil.								
PO 490 – Participate in a Aircrew Survival Exercise								
490 PC	PO 490	To assess the cadet's ability to perform the following skills: operating a stove and lantern, tying knots and lashings, using a Global Positioning System (GPS) receiver, and lighting fires with improvised methods.	Skills	Performance Assessment	The cadet is observed as they perform the various skills to participate in a field exercise to include: operating a stove and lantern, tying knots and lashings, using a Global Positioning System (GPS) receiver, and lighting fires with improvised methods.	After completion of instruction and during a field exercise.	Chapter 3, Annex B, Appendix 7 checklist and associated rubric.	Assistance is denied.

Unofficial convenience copy of A-CR-CCP-804/PG-001, cached 2026-11-08 from https://app.cadets.gc.ca/cadet-publications/A-CR-CCP-804-PG-001/A-CR-CCP-804-PG-001.pdf. Verify against the official publication.

THIS PAGE INTENTIONALLY LEFT BLANK

Unofficial convenience copy of A-CR-CCP-804/PG-001, cached 2026-11-08 from https://app.cadets.gc.ca/cadet-publications/A-CR-CCP-804-PG-001/A-CR-CCP-804-PG-001.pdf. Verify against the official publication.

ANNEX B, APPENDIX 1

403 PC

ASSESSMENT INSTRUCTIONS

PREPARATION

PRE-ASSESSMENT INSTRUCTIONS

Review the assessment plan, assessment instructions, 403 PC Assessment Rubrics, Assessment Checklists and become familiar with the material prior to conducting the assessment.

This PC consists of two parts, a leadership assignment and a leadership appointment. There is no time allotted for the PC as it is to be administered whenever and wherever Proficiency Level Four cadets lead cadets through a leadership assignment or appointment.

Leadership Assignment. The cadet shall be given a minimum of one practice leadership assignment which will be assessed using the 403 PC Assessment Rubric – Leadership Assignment. The cadet will reflect and self-assess after the practice leadership assignment using the same rubric. The formal leadership assignment will be given and assessed using the same rubric.

Leadership Appointment. The formal leadership appointment will be given and assessed using the 403 PC Assessment Rubric – Leadership Appointment. The cadet will reflect and self-assess after the leadership appointment using the same rubric. The leadership appointment assessment shall be recorded on the cadet's qualification record.

Photocopy the 403 PC Assessment Rubrics.

Photocopy the 403 PC Assessment Checklists.

PRE-ASSESSMENT ASSIGNMENT

The cadet shall review the 403 PC Assessment Rubrics and Checklists and become familiar with the assessment criteria.

ASSESSMENT METHOD

Performance assessment and personal communication were chosen as it allows the assessor to observe the cadet's ability to perform the required skill(s) and make a judgment on the quality of performance.

CONDUCT OF ASSESSMENT

PURPOSE

The purpose of this PC is to assess the cadet's ability to lead cadets through a leadership assignment and appointment.

RESOURCES

- Two 403 PC Assessment Checklists,
- Two 403 PC Assessment Rubrics, and
- As per the leadership assignment or appointment.

Unofficial convenience copy of A-CR-CCP-804/PG-001, cached 2026-11-08 from https://app.cadets.gc.ca/cadet-publications/A-CR-CCP-804-PG-001/A-CR-CCP-804-PG-001.pdf.
Verify against the official publication.

ASSESSMENT ACTIVITY LAYOUT

As per the leadership assignment or appointment.

ASSESSMENT ACTIVITY INSTRUCTIONS – LEADERSHIP ASSIGNMENT

1. Communicate to the cadet their leadership assignment either verbally or in writing.

2. Ensure the cadet understands the leadership assignment.

3. Have the cadet conduct the leadership assignment.

4. Using the Assessment Rubrics as a guide, make notes of observations and record results on the corresponding Assessment Checklist.



The assessment of leadership abilities is subjective; however, the assessor's responsibility is to be as positive as possible.

5. Have the cadet assess their performance using the Assessment Rubric. Ensure the cadet understands their self-assessment will not be recorded on their qualification record.

ASSESSMENT ACTIVITY INSTRUCTIONS – LEADERSHIP APPOINTMENT

1. Meet with the cadet to assign their leadership appointment. The Training Officer shall have developed a list of appointments, based on the examples suggested in M403.06 (Act as a Team Leader During a Leadership Appointment).

2. Ensure the cadet understands the leadership appointment.

3. Have the cadet carry out the leadership appointment.

4. Using the Assessment Rubrics as a guide, evaluate the cadet's leadership ability by observation throughout the duration of the leadership appointment, make notes of observations and record results on the corresponding Assessment Checklist.



The assessment of leadership abilities is subjective; however, the assessor's responsibility is to be as positive as possible.

5. Have the cadet self-assess their performance using the Assessment Rubric. Ensure the cadet understands their self-assessment will not be recorded on their qualification record.

POST ASSESSMENT INSTRUCTIONS

RECORDING ASSESSMENT RESULTS

1. The overall performance assessment for PO 403 is a combined result of the leadership assignment and appointment assessments. Indicate the overall performance assessment on the Assessment Checklist as:

   a. **Incomplete**. The cadet has not achieved the performance standard by receiving an “incomplete” on more than four (between both assessments) of the criteria;

Unofficial convenience copy of A-CR-CCP-804/PG-001, cached 2026-11-08 from https://app.cadets.gc.ca/cadet-publications/A-CR-CCP-804-PG-001/A-CR-CCP-804-PG-001.pdf.
Verify against the official publication.

b. **Completed With Difficulty**. The cadet has achieved the performance standard by receiving an "incomplete" on less than five (between both assessments) of the criteria;

c. **Completed Without Difficulty**. The cadet has achieved the performance standard by receiving a minimum of "completed with difficulty" on all criteria and "completed without difficulty" on nine (between both assessments) or more of the criteria; or

d. **Exceeded Standard**. The cadet has achieved the performance standard by receiving a minimum of "completed without difficulty" on all criteria and "exceeded standard" on 12 (between both assessments) or more of the criteria.

2. Record notes and observations in the assessor's feedback section of the Assessment Checklist.

3. Sign and date the Assessment Checklist.

4. Ensure a copy of the Assessment Checklists is attached to the cadet's training file.

5. The overall result will be recorded on the Proficiency Level Four Qualification Record located at Chapter 3, Annex C.

PROVIDING ASSESSMENT FEEDBACK

Discuss the cadet's self-assessment on their performance.

Following each assessment, ask the cadet what they felt went right during the leadership assessment, what did not go well and ask the cadet how they would improve their performance if the leadership assignment or appointment was given to them again.

Discuss the performance results of each section of the Assessment Rubric with the cadet.

Discuss the overall performance results with the cadet and provide the cadet with a copy of the completed Assessment Checklists.



Because of the duration and overall nature of the leadership appointment, feedback needs to be provided on an ongoing basis. Additional time will also need to be scheduled upon the conclusion of the appointment for final feedback.

Unofficial convenience copy of A-CR-CCP-804/PG-001, cached 2026-11-08 from https://app.cadets.gc.ca/cadet-publications/A-CR-CCP-804-PG-001/A-CR-CCP-804-PG-001.pdf.
Verify against the official publication.

403 PC ASSESSMENT RUBRIC

LEADERSHIP ASSIGNMENT

	Incomplete (I)	Completed With Difficulty (D)	Completed Without Difficulty (C)	Exceeded the Standard (E)
Select a leadership approach.	Did not select an approach appropriate to the assignment.	Selected an approach and was challenged with balancing focus on the team members and the goal.	Selected an approach and strived to balance team members and the goal and simplicity and safety of the task.	Selected the most appropriate approach with a strong balance of team members and the goal and simplicity and safety of the task.
Communicate as a team leader.	Did not communicate with team members.	Communicated with team members occasionally. Team members needed clarification on many occasions.	Communicated with team members on many occasions. Team members needed few clarifications.	Communicated to the team throughout the leadership task. Team members did not need clarification.
Supervise team members.	Did not supervise team members.	Only supervised team members at the beginning and / or end of the leadership assignment.	Supervised throughout the leadership assignment making some corrections when necessary.	Supervised throughout the leadership assignment making corrections as necessary.
Solve problems.	Did not solve problems.	Attempted to solve some problems and selected inefficient problem solving methods.	Solved most problems as they arose and often selected the appropriate problem solving method.	Solved problems as they arose and selected the most appropriate problem solving method.
Motivate team members.	Did not motivate team members.	Only motivated periodically and without enthusiasm.	Motivated frequently and with enthusiasm, with attention at times to both individuals and the team.	Motivated consistently and with enthusiasm, addressing both individuals and the team.
Provide feedback to team members.	Did not provide feedback to team members.	Provided select feedback; was not always frequent, accurate, specific and / or timely.	Provided periodic feedback and was often frequent, accurate, specific and / or timely.	Provided consistent feedback and was regularly frequent, accurate, specific and / or timely.
Meet expectations of team members.	Made no effort to meet the needs and expectations of team members.	Made some efforts to meet the needs and expectations of team members but with limited results.	Made considerable efforts to meet the needs and expectations of team members with adequate results.	Made consistent efforts to meet the needs and expectations of team members with solid results.
Complete the leadership assignment.	Did not complete the leadership assignment.		Completed the leadership assignment.	
Perform self-assessment.	Did not complete the self-assessment.		Completed the self-assessment.	

Unofficial convenience copy of A-CR-CCP-804/PG-001, cached 2026-11-08 from https://app.cadets.gc.ca/cadet-publications/A-CR-CCP-804-PG-001/A-CR-CCP-804-PG-001.pdf. Verify against the official publication.

403 PC ASSESSMENT RUBRIC

LEADERSHIP ASSIGNMENT

	Incomplete (I)	Completed With Difficulty (D)	Completed Without Difficulty (C)	Exceeded the Standard (E)
Select a leadership approach.	Did not select appropriate approach(es) throughout the appointment.	Selected an approach and was challenged with balancing focus on the team members and the goal throughout the appointment.	Selected approach(es) throughout the appointment and strived to balance team members and the goal and simplicity and safety of the task.	Selected the most appropriate approach(es) throughout the appointment with a strong balance of team members and the goal and simplicity and safety of the task.
Communicate as a team leader.	Did not communicate with team members.	Did not communicate with team members frequently enough. Team members needed clarification on many occasions.	Communicated with team members on many occasions. Team members needed few clarifications.	Communicated with team members consistently throughout the leadership appointment. Team members did not need clarification.
Supervise team members.	Did not supervise team members.	Did not successfully apply the principles of supervision; supervision was infrequent throughout the appointment.	Supervised throughout the leadership appointment, making some corrections when necessary.	Supervised consistently throughout the leadership assignment, making corrections as necessary.
Solve problems.	Did not solve problems.	Attempted to solve some problems and selected inefficient problem solving methods.	Solved most problems as they arose and often selected the appropriate problem solving method.	Solved problems as they arose and selected the most appropriate problem solving method.
Motivate team members.	Did not motivate team members.	Only motivated periodically and without enthusiasm.	Motivated frequently and with enthusiasm, with attention at times to both individuals and the team.	Motivated consistently and with enthusiasm, addressing both individuals and the team.
Provide feedback to team members.	Did not provide feedback to team members.	Provided select feedback; was not always frequent, accurate, specific and / or timely.	Provided periodic feedback and was often frequent, accurate, specific and / or timely.	Provided consistent feedback and was regularly frequent, accurate, specific and / or timely.
Meet expectations of team members.	Made no effort to meet the needs and expectations of team members.	Made some efforts throughout the appointment to meet the needs and expectations of team members but with limited results.	Made considerable efforts throughout the appointment to meet the needs and expectations of team members with adequate results.	Made consistent efforts throughout the appointment to meet the needs and expectations of team members with solid results.
Perform self-assessment.	Did not complete the self-assessment.		Completed the self-assessment.	

Unofficial convenience copy of A-CR-CCP-804/PG-001, cached 2026-11-08 from https://app.cadets.gc.ca/cadet-publications/A-CR-CCP-804-PG-001/A-CR-CCP-804-PG-001.pdf. Verify against the official publication.

THIS PAGE INTENTIONALLY LEFT BLANK

Unofficial convenience copy of A-CR-CCP-804/PG-001, cached 2026-11-08 from https://app.cadets.gc.ca/cadet-publications/A-CR-CCP-804-PG-001/A-CR-CCP-804-PG-001.pdf. Verify against the official publication.

403 PC ASSESSMENT CHECKLIST
LEADERSHIP ASSIGNMENT

Cadet's Name: _____ Squadron: _____

Date: _____ Flight: _____

	Assessment (circle one)	Notes
Select a leadership approach.	I D C E	
Communicate as a team leader.	I D C E	
Supervise team members.	I D C E	
Solve problems.	I D C E	
Motivate team members.	I D C E	
Provide feedback to team members.	I D C E	
Meet expectations of team members.	I D C E	
Complete the leadership assignment.	I C	
Perform self-assessment.	I C	

I = Incomplete D = Completed With Difficulty C = Completed Without Difficulty E = Exceeded Standard

Assessor's Name:	**Position:**
Assessor's Signature:	**Date:**

This form shall be reproduced locally.

Unofficial convenience copy of A-CR-CCP-804/PG-001, cached 2026-11-08 from https://app.cadets.gc.ca/cadet-publications/A-CR-CCP-804-PG-001/A-CR-CCP-804-PG-001.pdf.
Verify against the official publication.

403 PC ASSESSMENT CHECKLIST
LEADERSHIP APPOINTMENT

Cadet's Name: _____ Squadron: _____

Date: _____ Flight: _____

	Assessment (circle one)	Notes
Select a leadership approach.	I D C E	
Communicate as a team leader.	I D C E	
Supervise team members.	I D C E	
Solve problems.	I D C E	
Motivate team members.	I D C E	
Provide feedback to team members.	I D C E	
Meet expectations of team members.	I D C E	
Perform self-assessment.	I C	

I = Incomplete D = Completed With Difficulty C = Completed Without Difficulty E = Exceeded Standard

Assessor's Name:	**Position:**
Assessor's Signature:	**Date:**

This form shall be reproduced locally.

Unofficial convenience copy of A-CR-CCP-804/PG-001, cached 2026-11-08 from https://app.cadets.gc.ca/cadet-publications/A-CR-CCP-804-PG-001/A-CR-CCP-804-PG-001.pdf.
Verify against the official publication.

403 PC ASSESSMENT CHECKLIST
OVERALL ASSESSMENT

The PO 403 Overall Assessment includes the evaluation of both the leadership assignment and the leadership appointment.

Assessor's feedback:

	PO 403 Overall Assessment							
Check One	**Incomplete**		**Completed With Difficulty**		**Completed Without Difficulty**		**Exceeded Standard**	
Overall Performance	The cadet has not achieved the performance standard by receiving an "incomplete" on more than four (between both assessments) of the criteria.		The cadet has achieved the performance standard by receiving an "incomplete" on less than five (between both assessments) of the criteria.		The cadet has achieved the performance standard by receiving a minimum of "completed with difficulty" on all criteria and "completed without difficulty" on nine (between both assessments) or more of the criteria.		The cadet has achieved the performance standard by receiving a minimum of "completed without difficulty" on all criteria and "exceeded standard" on 12 (between both assessments) or more of the criteria.	

Assessor's Name:	**Position:**
Assessor's Signature:	**Date:**

This form shall be reproduced locally.

Unofficial convenience copy of A-CR-CCP-804/PG-001, cached 2026-11-08 from https://app.cadets.gc.ca/cadet-publications/A-CR-CCP-804-PG-001/A-CR-CCP-804-PG-001.pdf.
Verify against the official publication.

THIS PAGE INTENTIONALLY LEFT BLANK

Unofficial convenience copy of A-CR-CCP-804/PG-001, cached 2026-11-08 from https://app.cadets.gc.ca/cadet-publications/A-CR-CCP-804-PG-001/A-CR-CCP-804-PG-001.pdf.
Verify against the official publication.

ANNEX B, APPENDIX 2

404 PC – PERSONAL FITNESS AND HEALTHY LIVING

ASSESSMENT INSTRUCTIONS

GENERAL

No time is allotted for this PC, as it is to be administered whenever the cadet hands in their completed Physical Activity Tracker.

The Physical Activity Tracker and the requirements of this PC are covered during EO MX04.01 (Participate in 60 Minutes of Moderate- to Vigorous-Intensity Physical Activity [MVPA] and Track Participation in Physical Activities).

PRE-ASSESSMENT INSTRUCTIONS

1. Gather the 404 PC Personal Fitness and Healthy Living Assessment Form.

2. Meet with the cadet to ensure they have received the Physical Activity Tracker, and that they are familiar with the assessment requirements.



MVPA (moderate- to vigorous-intensity physical activity) is a combination of moderate and vigorous intensity activity:

- Moderate-intensity physical activities will cause teens to sweat a little and to breathe harder (eg, skating or bike riding).
- Vigorous-intensity physical activities will cause teens to sweat and be ‘out of breath’ (eg, running or rollerblading).

CONDUCT OF ASSESSMENT

1. Have the cadet complete their Physical Activity Tracker and meet with them as required to deal with any difficulties that may arise. Make notes of observations.

2. Once the cadet has completed the Physical Activity Tracker, evaluate their performance using the assessment form.

3. Conduct a debriefing. Ask the cadet what they felt went well and what they would improve upon if the assessment was given to them again.

4. Discuss the overall performance results with the cadet and provide the cadet with a copy of the completed 404 PC Personal Fitness and Healthy Living Assessment Form.

POST ASSESSMENT INSTRUCTIONS

1. Place a copy of the 404 PC Personal Fitness and Healthy Living Assessment Form in the cadet's training file.

2. Record the overall result on the Proficiency Level Four Qualification Record.

Unofficial convenience copy of A-CR-CCP-804/PG-001, cached 2026-11-08 from https://app.cadets.gc.ca/cadet-publications/A-CR-CCP-804-PG-001/A-CR-CCP-804-PG-001.pdf.
Verify against the official publication.

404 PC - PERSONAL FITNESS AND HEALTHY LIVING

ASSESSMENT FORM

Cadet's Name: _____ Date: _____

Assessor's feedback:

	PO 404 Assessment Results							
Check One	**Incomplete**		**Completed With Difficulty**		**Completed Without Difficulty**		**Exceeded Standard**	
Overall Performance	The cadet did not complete a minimum of 60 minutes of MVPA daily for at least 20 days over four consecutive weeks.				The cadet has achieved the performance standard by completing a minimum of 60 minutes of MVPA daily for 20 days over four consecutive weeks.		The cadet has exceeded the performance standard by completing a minimum of 60 minutes of MVPA daily for 24 days or more over four consecutive weeks.	

Assessor's Name:	**Position:**
Assessor's Signature:	**Date:**

This form shall be reproduced locally.

Unofficial convenience copy of A-CR-CCP-804/PG-001, cached 2026-11-08 from https://app.cadets.gc.ca/cadet-publications/A-CR-CCP-804-PG-001/A-CR-CCP-804-PG-001.pdf.
Verify against the official publication.

ANNEX B, APPENDIX 3

408 PC

ASSESSMENT INSTRUCTIONS

PREPARATION

PRE-ASSESSMENT INSTRUCTIONS

Review the assessment plan, assessment instructions and 408 PC Assessment Checklist and become familiar with the material prior to conducting the assessment.

Photocopy the 408 PC Assessment Checklist for each cadet.

Ensure each cadet has received a parade sequence aide-mémoire card (located at A-CR-CCP-804/PF-001, *Proficiency Level Four Instructional Guides*, EO M408.03 [Command a Squad]).

PRE-ASSESSMENT ASSIGNMENT

Have the cadet review the assessment activity instructions and the 408 PC Assessment Checklist to become familiar with the material prior to participating in the assessment.

ASSESSMENT METHOD

Performance assessment was chosen to observe and evaluate the cadet commanding a flight on parade.

CONDUCT OF ASSESSMENT

PURPOSE

The purpose of this PC is to assess the cadet's ability to command a flight on parade.

RESOURCES

- 408 PC Assessment Checklist, and
- Parade sequence aide-mémoire card.

ASSESSMENT ACTIVITY LAYOUT

This assessment shall be conducted in a drill hall or outdoor parade square in favourable weather.

Assessments may be conducted throughout the year, during parades (eg, opening parade, closing parade, ceremonial parades).

Unofficial convenience copy of A-CR-CCP-804/PG-001, cached 2026-11-08 from https://app.cadets.gc.ca/cadet-publications/A-CR-CCP-804-PG-001/A-CR-CCP-804-PG-001.pdf.
Verify against the official publication.

ASSESSMENT ACTIVITY INSTRUCTIONS



After observing each skill being performed, make a judgment and indicate on the Assessment Checklist whether the skill was:

Incomplete. The skill was not attempted or not completed even with assistance;

Completed with difficulty. The skill was completed with some difficulty / assistance or with heavy reliance on the parade sequence aide-mémoire card;

Completed without difficulty. The skill was completed without difficulty / assistance or required only occasional reference to the parade sequence aide-mémoire card; or

Exceeded standard. The skill was completed without any difficulty / assistance and required no use of the parade sequence aide-mémoire card.

Make notes of observations for the purpose of providing descriptive post-assessment feedback.

Assess the cadet's performance for each skill and record the results on the Assessment Checklist.

Cadets may be given unlimited re-tests within the resources of the cadet squadron to meet the standard for each skill. Where time permits, cadets may re-test to improve their results.

POST ASSESSMENT INSTRUCTIONS

RECORDING ASSESSMENT RESULTS

Indicate the overall performance assessment on the Assessment Checklist as:

Incomplete. The cadet has not achieved the performance standard by not completing at least one of the required areas;

Completed with difficulty. The cadet has achieved the performance standard by completing one or more or the required objectives with difficulty;

Completed without difficulty. The cadet has achieved the performance standard by completing all objectives without difficulty; or

Exceeded standard. The cadet has achieved the performance standard by exceeding the standard on all objectives.

Record notes made in the assessor’s feedback section of the Assessment Checklist.

Sign and date the Assessment Checklist.

Ensure a copy of the Assessment Checklist is attached to the cadet's training file.

The overall result will be recorded on the Proficiency Level Four Qualification Record located at Chapter 3, Annex C.

PROVIDING ASSESSMENT FEEDBACK

Discuss the overall performance results with the cadet and provide them with a copy of the completed checklist.

Unofficial convenience copy of A-CR-CCP-804/PG-001, cached 2026-11-08 from https://app.cadets.gc.ca/cadet-publications/A-CR-CCP-804-PG-001/A-CR-CCP-804-PG-001.pdf.
Verify against the official publication.

408 PC ASSESSMENT CHECKLIST

Cadet's Name: _____ Date: _____

Analytical Performance Assessment:	Incomplete The skill was not attempted or not completed even with assistance.	Completed With Difficulty The skill was completed with some difficulty / assistance or with heavy reliance on the parade sequence aide-mémoire card.	Completed Without Difficulty The skill was completed without difficulty / assistance or required only occasional reference to the parade sequence aide-mémoire card.	Exceeded Standard The skill was completed without any difficulty / assistance and required no use of the parade sequence aide-mémoire card.
Fall In				
The cadet assumed the proper command position—centred and three paces in front of the flight.				
The cadet ordered the flight to stand at ease.				
Once the last flight was ordered, the cadet turned about, observed the standard pause and stood at ease.				
Inspection				
The cadet ensured the flight was at attention.				
The cadet awaited the arrival of the Reviewing Officer (RO) three paces in front of the flight marker.				
The cadet saluted (if required) and reported the flight to the RO.				
The cadet guided the RO through the inspection of each rank of the flight.				

Unofficial convenience copy of A-CR-CCP-804/PG-001, cached 2026-11-08 from https://app.cadets.gc.ca/cadet-publications/A-CR-CCP-804-PG-001/A-CR-CCP-804-PG-001.pdf.
Verify against the official publication.

The cadet saluted (if required) and asked for permission to carry on.				
The cadet returned to the front of the flight, centred and three paces in front.				
The cadet ordered the flight to close order march and stand at ease.				
The cadet executed an about turn and stood at ease.				
March Past				
The cadet executed all commands given by the parade commander.				
The cadet assumed the correct position in front of the flight throughout the march past.				
The cadet correctly delivered all required commands throughout the march past.				
Once commanded to advance, the cadet turned and wheeled into position in front of the flight.				
Fall Out				
Once commanded to dismiss, the cadet observed the standard pause, saluted if an officer was present and then marched off the parade square.				

This form shall be reproduced locally.

Unofficial convenience copy of A-CR-CCP-804/PG-001, cached 2026-11-08 from https://app.cadets.gc.ca/cadet-publications/A-CR-CCP-804-PG-001/A-CR-CCP-804-PG-001.pdf.
Verify against the official publication.

Assessor's Feedback:

	PO 408 Overall Assessment							
Check One	**Incomplete**		**Completed With Difficulty**		**Completed Without Difficulty**		**Exceeded Standard**	
Overall Performance	The cadet has not achieved the performance standard by not completing at least one of the required areas.		The cadet has achieved the performance standard by completing one or more or the required objectives with difficulty.		The cadet has achieved the performance standard by completing all objectives without difficulty.		The cadet has achieved the performance standard by exceeding the standard on all objectives.	

Assessor's Name:	**Position:**
Assessor's Signature:	**Date:**

This form shall be reproduced locally.

Unofficial convenience copy of A-CR-CCP-804/PG-001, cached 2026-11-08 from https://app.cadets.gc.ca/cadet-publications/A-CR-CCP-804-PG-001/A-CR-CCP-804-PG-001.pdf.
Verify against the official publication.

THIS PAGE INTENTIONALLY LEFT BLANK

Unofficial convenience copy of A-CR-CCP-804/PG-001, cached 2026-11-08 from https://app.cadets.gc.ca/cadet-publications/A-CR-CCP-804-PG-001/A-CR-CCP-804-PG-001.pdf.
Verify against the official publication.

ANNEX B, APPENDIX 4

409 PC

ASSESSMENT INSTRUCTIONS

PREPARATION

PRE-ASSESSMENT INSTRUCTIONS

The course officer shall communicate with the training officer to:

1. place the Proficiency Level Four cadets into the Proficiency Level One and Proficiency Level Two instructor schedules;

2. ensure the cadets are assigned a 30-minute lesson at least two weeks prior to conducting this assessment, to include:

    a. a lesson specification, and

    b. an instructional guide; and

3. assign an assessor to each lesson.

Ensure that all resources requested by the cadets are available.

Review the assessment plan, assessment instructions and 409 PC Assessment Rubric and Checklist and become familiar with the material prior to conducting the assessment.

Photocopy the 409 PC Assessment Checklist for each cadet.

Review the lesson content and become familiar with the material prior to assessing the lesson.

PRE-ASSESSMENT ASSIGNMENT

Each cadet shall review the 409 PC Assessment Rubric and Checklist and become familiar with the assessment criteria prior to instructing their lesson.

Each cadet is to prepare to instruct a 30-minute lesson, by:

1. researching lesson content;

2. planning a lesson;

3. developing instructional aids; and

4. preparing the lesson location.

ASSESSMENT METHOD

Performance assessment was chosen as it allows the assessor to observe the cadet while instructing a lesson and make a judgement on the cadet's level of preparation, classroom management skills, use of instructional methods, use of instructional aids and overall instructional techniques.

Unofficial convenience copy of A-CR-CCP-804/PG-001, cached 2026-11-08 from https://app.cadets.gc.ca/cadet-publications/A-CR-CCP-804-PG-001/A-CR-CCP-804-PG-001.pdf.
Verify against the official publication.

CONDUCT OF ASSESSMENT

PURPOSE

The purpose of this assessment is to assess the cadet's ability to prepare and instruct a 30-minute lesson to Proficiency Level One and Two cadets in a real-life setting, during a regular training session.

RESOURCES

- 409 PC Assessment Rubric,
- 409 PC Assessment Checklists, and
- As per the lesson assigned.

ASSESSMENT ACTIVITY LAYOUT

Classroom or training area large enough to accommodate the entire group.

ASSESSMENT ACTIVITY INSTRUCTIONS



This PC is assessed during EO M409.05 / EO C409.02 (Instruct a 30-Minute Lesson), or any additional opportunity thereafter.

Each cadet, prior to the start of EO M409.05 (Instruct a 30-Minute Lesson), will be required to:

1. research lesson content;
2. plan a lesson;
3. develop instructional aids; and
4. set up the lesson location.

During the time allotted for this lesson each cadet will:

5. provide a copy of their written lesson plan to the assessor;
6. instruct a 30-minute lesson by:
    a. introducing the lesson;
    b. presenting the content of the lesson
    c. confirming the knowledge / skills learned during the lesson; and
    d. concluding the lesson; and
7. participate in a individual feedback session with the assessor upon completion of the lesson.

Using the 409 PC Assessment Rubric as a guide, the assessor shall make notes of observations and record results on the 409 PC Assessment Checklist.

Unofficial convenience copy of A-CR-CCP-804/PG-001, cached 2026-11-08 from https://app.cadets.gc.ca/cadet-publications/A-CR-CCP-804-PG-001/A-CR-CCP-804-PG-001.pdf.
Verify against the official publication.



Should any content errors or omissions be made during the conduct of the lesson, the assessor shall take appropriate actions to ensure the cadets receive the correct information.

POST ASSESSMENT INSTRUCTIONS

RECORDING ASSESSMENT RESULTS

1. The overall result will be recorded on the Proficiency Level Four Qualification Record located at Chapter 3, Annex C. Indicate the overall performance assessment on the qualification record as:

   a. **Incomplete**. The cadet has not achieved the performance standard by receiving an “incomplete” on more than three of the criteria listed on the assessment checklist;

   b. **Completed With Difficulty**. The cadet has achieved the performance standard by receiving an incomplete on not more than three of the criteria;

   c. **Completed Without Difficulty**. The cadet has achieved the performance standard by receiving a minimum of “completed with difficulty” on all criteria and “completed without difficulty” on 10 or more of the criteria; or

   d. **Exceeded Standard**. The cadet has achieved the performance standard by receiving a minimum of “completed without difficulty” on all criteria and “exceeded standard” on seven or more of the criteria.

2. Record notes made in the assessor’s feedback section of the assessment checklist.

3. Sign and date the assessment checklist.

4. Ensure a copy of the assessment checklist is attached to the cadet's training file.

PROVIDING ASSESSMENT FEEDBACK

This assessment is accomplished through direct / immediate feedback with the cadet upon completion of the period of instruction. The assessor should offer feedback and suggestions for improvement to the cadet based on the 409 PC Assessment Rubric and Checklist.

Discuss the overall performance results with the cadet and provide them with a copy of the completed checklist.

Unofficial convenience copy of A-CR-CCP-804/PG-001, cached 2026-11-08 from https://app.cadets.gc.ca/cadet-publications/A-CR-CCP-804-PG-001/A-CR-CCP-804-PG-001.pdf.
Verify against the official publication.

409 PC ASSESSMENT RUBRIC

	Incomplete (I)	Completed With Difficulty (D)	Completed Without Difficulty (C)	Exceeded Standard (E)
Lesson Preparation				
Lesson plan	The lesson plan was not submitted, it had insufficient detail to deliver a full period of instruction or it was not developed IAW the QSP.	The lesson plan was disorganized / hard to follow or was incomplete or included few details of how TPs were to be presented.	The lesson plan was neat and easy to follow. The introduction, body, end of lesson confirmation and conclusion were complete and accurate.	The lesson plan was neat and easy to follow. The introduction, body, end of lesson confirmation and conclusion were complete, accurate and detailed enough for another instructor to follow and implement without difficulty.
Instructional aids	The instructional aids were not developed, not relevant or were of poor quality.	The instructional aids were relevant, but their ease of use and effectiveness were questionable.	The instructional aids were relevant, easy to use and assisted in clarifying lesson content.	The instructional aids were relevant, easy to use and assisted in clarifying lesson content. In addition, instructional aids were creative, well thought-out and extra effort on the cadet's part was evident.
Classroom / training area set up	Set-up of the classroom / training area was not suitable to the lesson.	Set-up of the classroom / training area was suitable to the lesson, however some elements were overlooked.	The classroom / training area was well set up, with due consideration given to such things as: • functional seating formation, • lighting, and • instructional aids were easily accessible and ready to use, and • distractions were minimized.	N/A
Lesson Introduction				
Review of previous lesson (if applicable)	The cadet did not review the previous lesson.	The cadet stated the topic of the previous lesson.	The cadet stated the topic of the previous lesson and provided a brief summary of the content.	N/A
Introduction of lesson	The cadet did not provide an introduction to the lesson.	The cadet stated what will be learned, but was unclear in the description of why it is important or where the knowledge / skills will be applied.	The cadet clearly described what will be learned, why it is important and where the knowledge / skills will be applied.	The cadet clearly described what will be learned, why it is important and where the knowledge / skills will be applied in a creative and engaging way.
Lesson Body				
Method(s) of instruction	The cadet's choice of method was not appropriate to the content or the audience.	The cadet's choice of method was appropriate but they displayed some difficulty using the method.	The cadet's choice of method was appropriate and they displayed no difficulty using the method.	N/A
Learning environment	The cadet did not ensure the physical safety of the class, and/or the cadet made no attempt to employ stress and classroom management techniques, as described in EO M409.02.	The cadet ensured the physical safety of the class at all times. The cadet attempted to employ stress and classroom management techniques, however experienced difficulty using them effective and timely manner.	The cadet ensured the physical safety of the class at all times. The cadet employed stress classroom management techniques, as necessary, in an effective and timely manner.	The cadet ensured the physical safety of the class at all times. The cadet always controlled positive and negative stress, and displayed excellent classroom management techniques.

Unofficial convenience copy of A-CR-CCP-804/PG-001, cached 2026-11-08 from https://app.cadets.gc.ca/cadet-publications/A-CR-CCP-804-PG-001/A-CR-CCP-804-PG-001.pdf. Verify against the official publication.

	Incomplete (I)	Completed With Difficulty (D)	Completed Without Difficulty (C)	Exceeded Standard (E)
Effective use instructional aids	The cadet did not use instructional aids.	The instructional aids were difficult to see / use, or were introduced at an ineffective time.	The instructional aids were clearly displayed and were appropriately introduced.	N/A
Satisfaction of learner needs	The lesson was delivered in a way that was inappropriate for the developmental period of the audience and did not present visual, auditory or kinesthetic learning opportunities.	Some aspects of the lesson delivery were not appropriate for the developmental period of the audience. The cadet included little variety with regard to providing visual, auditory or kinesthetic learning opportunities.	The lesson satisfied the needs of the developmental period of the audience. The cadet included some variety of visual, auditory and kinesthetic learning opportunities.	The lesson satisfied the needs of the developmental period of the audience. The cadet included many visual, auditory and kinesthetic learning opportunities throughout the lesson.
Accuracy of lesson content	The cadet displayed limited understanding of the lesson content and was unable to provide accurate explanations, demonstrations and/or clarification.	The cadet displayed a general understanding of the lesson content but struggled with the explanation, demonstration and/or clarification of some of the content.	The cadet displayed a sound understanding of lesson content and provided accurate explanations, demonstrations and/or clarification without difficulty.	The cadet displayed a mastery of the lesson content.
TP confirmation	The cadet did not use questions or an activity to confirm the understanding of the TP content; and did not adjust the instruction based on audience comprehension.	The cadet used questions or an activity to confirm the understanding of the TP content, however made little effort to adjust instruction based on audience comprehension.	The cadet used questions or an activity to confirm the understanding of the TP content, and as necessary, attempted to adjust instruction based on audience comprehension.	The questions or activity cadet creatively confirmed understanding at the end of each TP and easily adjusted instruction based on audience comprehension.
End of lesson confirmation	The knowledge or skills covered in the lesson were not confirmed using questions or an activity.	Questions or an activity was used as an end of lesson confirmation of knowledge or skills, however all teaching points were not covered.	Questions or an activity was used as an end of lesson confirmation of knowledge or skills and all teaching points were covered.	All knowledge or skills covered in the lesson were confirmed in a creative and engaging way.
Lesson Conclusion				
Lesson summary	The cadet did not re-state the objective of the lesson and did not summarize important points / areas for improvement.	The cadet re-stated the objectives of the lesson however struggled to summarize important points / areas for improvement.	The cadet re-stated the objectives of the lesson and concisely summarized important points / areas for improvement.	N/A
Re-motivation	The cadet did not attempt to re-motivate the cadets.	N/A	The cadet attempted to re-motivate the cadets.	N/A
Description of next lesson	The cadet did not describe the next lesson.	The cadet stated the topic of the next lesson.	The cadet stated the topic of the next lesson and provided a brief and accurate description of the lesson content.	N/A
Communication				
Voice control	The cadet did not speak clearly or consistently spoke too quickly or quietly to be understood.	The cadet was understood, however struggled with the use of pitch, tone, volume, speed, and pauses to articulate and place emphasis on points where necessary.	The cadet spoke clearly and made clear attempts to control pitch, tone, volume, speed, and pauses to articulate and place emphasis on points where necessary.	The cadet spoke clearly and made excellent use of pitch, tone, volume, speed, and pauses to articulate and place emphasis on points where necessary.
Body language, dress and deportment	The cadet exhibited inappropriate body language and/or poor dress and deportment.	The cadet attempted to use body language to help communicate and emphasise points and exhibited acceptable dress and deportment.	The cadet easily incorporated the use of body language to help communicate and emphasise points and exhibited acceptable dress and deportment.	The cadet easily incorporated the use of body language to help communicate and emphasise points and exhibited a high standard of dress and deportment.
Questioning techniques	The cadet did not use any questions or apply the questioning sequence (pose, pause, pounce, ponder and praise).	The cadet used appropriate types of questions but inconsistently applied the questioning sequence (pose, pause, pounce, ponder and praise).	The cadet used a variety of questions and consistently applied the questioning sequence (pose, pause, pounce, ponder and praise).	N/A

Unofficial convenience copy of A-CR-CCP-804/PG-001, cached 2026-11-08 from https://app.cadets.gc.ca/cadet-publications/A-CR-CCP-804-PG-001/A-CR-CCP-804-PG-001.pdf. Verify against the official publication.

	Incomplete (I)	Completed With Difficulty (D)	Completed Without Difficulty (C)	Exceeded Standard (E)
Time Management				
Time Management	The lesson was not completed within the allotted time, with more than 5 minutes deviation.	Time planned for and/or spent on individual TPs / activities was somewhat inaccurate or insufficient however the lesson was completed within the allotted time (+ / - 5 minutes).	Time planned for and/or spent on individual TPs / activities was appropriate and the lesson was completed within the allotted time (+ / - 5 minutes).	N/A

Unofficial convenience copy of A-CR-CCP-804/PG-001, cached 2026-11-08 from https://app.cadets.gc.ca/cadet-publications/A-CR-CCP-804-PG-001/A-CR-CCP-804-PG-001.pdf. Verify against the official publication.

409 PC ASSESSMENT CHECKLIST

Cadet's Name: _____ Squadron: _____

Date: _____ Flight: _____

	Assessment (circle one)	Notes
Lesson Preparation		
Lesson Plan	I D C E	
Instructional aids	I D C E	
Classroom / training area set up	I D C	
Lesson Introduction		
Review of previous lesson (if applicable)	I D C	
Introduction of lesson	I D C E	
Lesson Body		
Method(s) of instruction	I D C	
Learning environment	I D C E	
Effective use of instructional aids	I D C	
Satisfaction of learner needs	I D C E	
Accuracy of lesson content	I D C E	
TP confirmation	I D C E	
End of lesson confirmation	I D C E	
Lesson Conclusion		
Lesson summary	I D C	
Re-motivation	I C	
Description of next lesson	I D C	

I = Incomplete D = Completed With Difficulty C = Completed Without Difficulty E = Exceeded Standard

Unofficial convenience copy of A-CR-CCP-804/PG-001, cached 2026-11-08 from https://app.cadets.gc.ca/cadet-publications/A-CR-CCP-804-PG-001/A-CR-CCP-804-PG-001.pdf.
Verify against the official publication.

	Assessment (circle one)	Notes
Communication		
Voice control	I D C E	
Body language, dress and deportment	I D C E	
Questioning techniques	I D C	
Time Management		
Time management	I D C	

I = Incomplete D = Completed With Difficulty C = Completed Without Difficulty E = Exceeded Standard

Assessor's Feedback:

	PO 409 Overall Assessment			
Check One	**Incomplete**	**Completed With Difficulty**	**Completed Without Difficulty**	**Exceeded Standard**
Overall Performance	The cadet has not achieved the performance standard by receiving an "incomplete" on more than three of the criteria.	The cadet has achieved the performance standard by receiving an "incomplete" on not more than three of the criteria and a minimum of "completed with difficulty" on all other criteria.	The cadet has achieved the performance standard by receiving a minimum of "completed with difficulty" on all criteria and "completed without difficulty" on 10 or more of the criteria.	The cadet has achieved the performance standard by receiving a minimum of "completed without difficulty" on all criteria and "exceeded standard" on 7 or more of the criteria.

Assessor's Name:	**Position:**
Assessor's Signature:	**Date:**

This form shall be reproduced locally.

Unofficial convenience copy of A-CR-CCP-804/PG-001, cached 2026-11-08 from https://app.cadets.gc.ca/cadet-publications/A-CR-CCP-804-PG-001/A-CR-CCP-804-PG-001.pdf.
Verify against the official publication.

ANNEX B, APPENDIX 5

429 PC

ASSESSMENT INSTRUCTIONS

PREPARATION

PRE-ASSESSMENT INSTRUCTIONS

Review the assessment plan, assessment instructions and 429 PC Tool Assessment and become familiar with the material prior to conducting the assessment.

Photocopy the 429 PC Assessment Tool for each cadet.

PRE-ASSESSMENT ASSIGNMENT

Nil.

ASSESSMENT METHOD

A selected response assessment was chosen to assess the cadet's knowledge of regulations and operating procedures for aviation transmission and licencing.

CONDUCT OF ASSESSMENT

PURPOSE

The purpose of this PC is to assess the cadet's knowledge of regulations and operating procedures for aviation transmission and licencing.

RESOURCES

- 429 PC Assessment Tool, and
- Pen / pencil.

ASSESSMENT ACTIVITY LAYOUT

This assessment shall be conducted in a classroom. Desks shall be separated as much as possible.



Criteria for assessing the cadet's knowledge are:

- **Incomplete.** Less than 60 percent.
- **Completed with difficulty.** 60–74 percent.
- **Completed without difficulty.** 75–89 percent.
- **Exceeded standard.** 90–100 percent.

ASSESSMENT ACTIVITY INSTRUCTIONS

1. Ensure that the cadets have a pen / pencil.
2. Distribute the Assessment Tool to each cadet face up and instruct them to begin only when told to do so.

Unofficial convenience copy of A-CR-CCP-804/PG-001, cached 2026-11-08 from https://app.cadets.gc.ca/cadet-publications/A-CR-CCP-804-PG-001/A-CR-CCP-804-PG-001.pdf.
Verify against the official publication.

3. Explain the structure of the Assessment Tool.
4. Ensure the cadets have written their names on the top of the Assessment Tool.
5. Have the cadets write the Assessment Tool.
6. Give the cadets a 10-minute warning.
7. Give the cadets a 5-minute warning.
8. Collect the Assessment Tools.

POST ASSESSMENT INSTRUCTIONS

RECORDING ASSESSMENT RESULTS

The overall result for 429 PC Assessment will be recorded on the Proficiency Level Four Qualification Record located at Chapter 3, Annex C.

PROVIDING ASSESSMENT FEEDBACK

Inform each cadet of their grade. No debriefing is required for those cadets who score 60 percent or more on the Assessment Tool. Cadets who score less than 60 percent will be debriefed individually. Those cadets are required to write a re-test. Any cadets who require a re-test must be tutored prior to the re-test. The content of the tutoring session will vary depending on the cadet. The aim of this session is to review the mistakes made in the original assessment and to prepare the cadet for the re-test.

Unofficial convenience copy of A-CR-CCP-804/PG-001, cached 2026-11-08 from https://app.cadets.gc.ca/cadet-publications/A-CR-CCP-804-PG-001/A-CR-CCP-804-PG-001.pdf.
Verify against the official publication.

429 PC ASSESSMENT

Cadet's Name: _____ Date: _____

Multiple Choice (25 points)

1. Who issues radio station licenses in Canada?

   - Industry Canada.
   - The Canadian Radio and Television Commission (CRTC).
   - The Post Office.
   - The Department of Communications.

2. The penalty for knowingly transmitting a false distress is:

   - a fine up to $5 000 plus costs.
   - a fine up to $5 000 and costs and / or imprisonment for up to 12 months.
   - forfeiture of radio equipment.
   - none of the above.

3. Your station is C-FBRD. The proper method to acknowledge the receipt of a distress message from aircraft C-FADA is:

   - MAYDAY, C-FBRD, C-FBRD, C-FBRD, RECEIVED MAYDAY, OUT.
   - MAYDAY, MAYDAY, MAYDAY, THIS IS C-FBRD, C-FBRD, C-FBRD, SILENCE MAYDAY.
   - MAYDAY, C-FADA, C-FADA, C-FADA, THIS IS C-FBRD, C-FBRD, C-FBRD, RECEIVED MAYDAY.
   - MAYDAY, C-FADA, C-FADA, C-FADA, THIS IS C-FBRD, C-FBRD, C-FBRD, MAYDAY RELAY OVER.

4. The order of priority for transmission in the aeronautical service is:

   - distress, urgency, and communications relating to radio direction findings.
   - distress, flight safety, and weather warnings.
   - distress, urgency, and flight safety.
   - distress, urgency, and safety communications.

5. Conversations heard over the air:

   - must be identified in English only.
   - must not exceed two minutes in length.
   - are to be treated as strictly confidential.
   - should be relayed to others who may be interested.

6. Radio equipment eligible for licensing in Canada must be:

   - DOC type approved or technically acceptable for licensing.
   - CAS approved.

Unofficial convenience copy of A-CR-CCP-804/PG-001, cached 2026-11-08 from https://app.cadets.gc.ca/cadet-publications/A-CR-CCP-804-PG-001/A-CR-CCP-804-PG-001.pdf.
Verify against the official publication.

- made in Canada.
- FCC approved.

7. Prohibited messages or transmissions are:
   - messages of a personal nature to an addressee.
   - a transmission with encrypted groups.
   - mixed plain language and coded groups.
   - false distress signals, profane language, and superfluous communications.
8. The Restricted Radiotelephone Operators Certificate is obtained by:
   - paying an annual fee.
   - demonstrating competence through testing.
   - installing type-approved equipment on board.
   - licencing your radio station.
9. Which of these could be a call sign for an aircraft station?
   - Mobile three.
   - Mobil Ted.
   - C-GAYE.
   - Cessna 150.
10. The signal MAYDAY indicates:
    - an urgency situation.
    - a safety message will follow.
    - normal communications can resume on a restricted basis.
    - a distress situation.
11. The spoken word / expression indicating an urgency situation is:
    - PAN PAN.
    - MAYDAY.
    - SOS.
    - EMERGENCY.
12. The call sign should be sent:
    - at least on the initial call.
    - only once during the call.
    - as often as necessary until a reply is received.
    - as quickly as possible to save air time.

Unofficial convenience copy of A-CR-CCP-804/PG-001, cached 2026-11-08 from https://app.cadets.gc.ca/cadet-publications/A-CR-CCP-804-PG-001/A-CR-CCP-804-PG-001.pdf.
Verify against the official publication.

13. Before making a radio transmission, you should:
    - make a test transmission.
    - listen first to ensure that the channel is clear.
    - transmit the signal BREAK BREAK.
    - adjust the gain control to maximum.

14. How can you recognize a signal emitted from an ELT?
    - a varying tone heard on 121.5 MHz.
    - a steady tone heard on 122.2 MHz.
    - a pre-recorded message heard on 121.5 MHz.
    - a pre-recorded message heard on 122.2 MHz.

15. Express $137.25 as it would be transmitted over the air:
    - dollars wun tree seven dayseemal too fife.
    - wun tree seven decimal too fife dollars.
    - wun tree seven dollars, too fife cents.
    - wun hundred thirty seven dayseemal too fife dollars.

16. Which of the following expressions follows proper radiotelephone procedure?
    - Over and out.
    - Repeat, over.
    - Affirmative, over.
    - Can you say again? Out.

17. Your aircraft registration is C-FGAC. How do you call another aircraft whose call sign is C-GBRD?
    - CHARLIE FOXTROT GOLF ALPHA CHARLIE TO CHARLIE GOLF BRAVO ROMEO DELTA, OVER.
    - CHARLIE GOLF BRAVO ROMEO DELTA, THIS IS CHARLIE FOXTROT GOLF ALPHA CHARLIE, OVER.
    - FOXTROT GOLF ALPHA CHARLIE, COME IN PLEASE.
    - FGAC HOW DO YOU READ ME, OVER.

18. Which time zone should be used when working in different time zones:
    - Eastern Standard Time.
    - Daylight Savings Time.
    - Atlantic Standard Time.
    - Coordinated Universal Time (UTC).

Unofficial convenience copy of A-CR-CCP-804/PG-001, cached 2026-11-08 from https://app.cadets.gc.ca/cadet-publications/A-CR-CCP-804-PG-001/A-CR-CCP-804-PG-001.pdf.
Verify against the official publication.

19. The term AFFIRMATIVE means:

- I request permission to ___.
- I agree, but please repeat.
- yes, or permission granted.
- please confirm, I do not understand.

20. What precautions should be taken before making a test transmission?

- Count from one to ten and back and ask anybody who is listening for a check.
- Listen to ensure no harmful interference will be caused to on-going communications on the frequency, and then make the test transmission, not exceeding ten seconds.
- Listen to make sure someone is on the air so that you can get a reply to your test.
- Request a signal check from any station.

21. What other search and rescue frequency is now commonly used in conjunction with 121.5 MHz?

- 243 MHz.
- 323 MHz.
- 500 MHz.
- 122.8 MHz.

22. The urgency call is comprised of:

- PAN PAN (spoken three times) THIS IS call sign of station (spoken three times).
- PAN PAN THIS IS call sign of station.
- PAN PAN (spoken three times) CALLING ALL STATIONS (spoken three times).
- MAYDAY (spoken three times) THIS IS call sign of station (spoken three times).

23. The word used to indicate that the transmission is ended but a response is expected, is:

- OVER.
- GO AHEAD.
- ROGER, OVER AND OUT.
- YOUR TURN.

24. To acknowledge a transmission you should say:

- 10-4.
- I RECEIVE.
- AFFIRMATIVE.
- ROGER.

Unofficial convenience copy of A-CR-CCP-804/PG-001, cached 2026-11-08 from https://app.cadets.gc.ca/cadet-publications/A-CR-CCP-804-PG-001/A-CR-CCP-804-PG-001.pdf.
Verify against the official publication.

25. Using the ITU Phonetic Alphabet, how would you spell the word BRAINS:

- BOSTON ROGER APPLE IDA NANCY SUGAR.
- BRAVO ROMEO ALPHA INDIA NOVEMBER SIERRA.
- BAKER ROBERTY ABLE ITALY NEW YORK SUSAN.
- BRAVO ROMEO ALPHA NOVEMBER SUZANNE.

This form shall be reproduced locally.

Unofficial convenience copy of A-CR-CCP-804/PG-001, cached 2026-11-08 from https://app.cadets.gc.ca/cadet-publications/A-CR-CCP-804-PG-001/A-CR-CCP-804-PG-001.pdf.
Verify against the official publication.

429 PC ASSESSMENT ANSWER KEY

Multiple Choice (25 points)

1. Who issues radio station licenses in Canada?

   - **Industry Canada.**
   - The Canadian Radio and Television Commission (CRTC).
   - The Post Office.
   - The Department of Communications.

2. The penalty for knowingly transmitting a false distress is:

   - a fine up to $5 000 plus costs.
   - **a fine up to $5 000 and costs and / or imprisonment for up to 12 months.**
   - forfeiture of radio equipment.
   - none of the above.

3. Your station is C-FBRD. The proper method to acknowledge the receipt of a distress message from aircraft C-FADA is:

   - MAYDAY, C-FBRD, C-FBRD, C-FBRD, RECEIVED MAYDAY, OUT.
   - MAYDAY, MAYDAY, MAYDAY, THIS IS C-FBRD, C-FBRD, C-FBRD, SILENCE MAYDAY.
   - **MAYDAY, C-FADA, C-FADA, C-FADA, THIS IS C-FBRD, C-FBRD, C-FBRD, received MAYDAY, OUT.**
   - MAYDAY, C-FADA, C-FADA, C-FADA, THIS IS C-FBRD, C-FBRD, C-FBRD, MAYDAY RELAY OVER.

4. The order of priority for transmission in the aeronautical service is:

   - distress, urgency, and communications relating to radio direction findings.
   - distress, flight safety, and weather warnings.
   - distress, urgency, and flight safety.
   - **distress, urgency, and safety communications.**

5. Conversations heard over the air:

   - must be identified in English only.
   - must not exceed two minutes in length.
   - **are to be treated as strictly confidential.**
   - should be relayed to others who may be interested.

6. Radio equipment eligible for licensing in Canada must be:

   - DOC type approved or technically acceptable for licensing.
   - CAS approved.

Unofficial convenience copy of A-CR-CCP-804/PG-001, cached 2026-11-08 from https://app.cadets.gc.ca/cadet-publications/A-CR-CCP-804-PG-001/A-CR-CCP-804-PG-001.pdf.
Verify against the official publication.

- made in Canada.
- **FCC approved.**

7. Prohibited messages or transmissions are:
   - messages of a personal nature to an addressee.
   - a transmission with encrypted groups.
   - mixed plain language and coded groups.
   - **false distress signals, profane language, and superfluous communications.**
8. The Restricted Radiotelephone Operators Certificate is obtained by:
   - paying an annual fee.
   - **demonstrating competence through testing.**
   - installing type-approved equipment on board.
   - licencing your radio station.
9. Which of these could be a call sign for an aircraft station?
   - Mobile three.
   - Mobil Ted.
   - **C-GAYE.**
   - Cessna 150.
10. The signal MAYDAY indicates:
    - an urgency situation.
    - a safety message will follow.
    - normal communications can resume on a restricted basis.
    - **a distress situation.**
11. The spoken word / expression indicating an urgency situation is:
    - **PAN PAN.**
    - MAYDAY.
    - SOS.
    - EMERGENCY.
12. The call sign should be sent:
    - **at least on the initial call.**
    - only once during the call.
    - as often as necessary until a reply is received.
    - as quickly as possible to save air time.

Unofficial convenience copy of A-CR-CCP-804/PG-001, cached 2026-11-08 from https://app.cadets.gc.ca/cadet-publications/A-CR-CCP-804-PG-001/A-CR-CCP-804-PG-001.pdf.
Verify against the official publication.

13. Before making a radio transmission, you should:
    - make a test transmission.
    - **listen first to ensure that the channel is clear.**
    - transmit the signal BREAK BREAK.
    - adjust the gain control to maximum.

14. How can you recognize a signal emitted from an ELT?
    - **a varying tone heard on 121.5 MHz.**
    - a steady tone heard on 122.2 MHz.
    - a pre-recorded message heard on 121.5 MHz.
    - a pre-recorded message heard on 122.2 MHz.

15. Express $137.25 as it would be transmitted over the air:
    - **dollars wun tree seven dayseemal too fife.**
    - wun tree seven decimal too fife dollars.
    - wun tree seven dollars, too fife cents.
    - wun hundred thirty seven dayseemal too fife dollars.

16. Which of the following expressions follows proper radiotelephone procedure?
    - Over and out.
    - Repeat, over.
    - **Affirmative, over.**
    - Can you say again? Out.

17. Your aircraft registration is C-FGAC. How do you call another aircraft whose call sign is C-GBRD?
    - CHARLIE FOXTROT GOLF ALPHA CHARLIE TO CHARLIE GOLF BRAVO ROMEO DELTA, OVER.
    - **CHARLIE GOLF BRAVO ROMEO DELTA, THIS IS CHARLIE FOXTROT GOLF ALPHA CHARLIE, OVER.**
    - FOXTROT GOLF ALPHA CHARLIE, COME IN PLEASE.
    - FGAC HOW DO YOU READ ME, OVER.

18. Which time zone should be used when working in different time zones:
    - Eastern Standard Time.
    - Daylight Savings Time.
    - Atlantic Standard Time.
    - **Coordinated Universal Time (UTC).**

Unofficial convenience copy of A-CR-CCP-804/PG-001, cached 2026-11-08 from https://app.cadets.gc.ca/cadet-publications/A-CR-CCP-804-PG-001/A-CR-CCP-804-PG-001.pdf.
Verify against the official publication.

19. The term AFFIRMATIVE means:

- I request permission to ____.
- I agree, but please repeat.
- **yes, or permission granted.**
- please confirm, I do not understand.

20. What precautions should be taken before making a test transmission?

- Count from one to ten and back and ask anybody who is listening for a check.
- **Listen to ensure no harmful interference will be caused to on-going communications on the frequency, and then make the test transmission, not exceeding ten seconds.**
- Listen to make sure someone is on the air so that you can get a reply to your test.
- Request a signal check from any station.

21. What other search and rescue frequency is now commonly used in conjunction with 121.5 MHz?

- **243 MHz.**
- 323 MHz.
- 500 MHz.
- 122.8 MHz.

22. The urgency call is comprised of:

- **PAN PAN (spoken three times) THIS IS call sign of station (spoken three times).**
- PAN PAN THIS IS call sign of station.
- PAN PAN (spoken three times) CALLING ALL STATIONS (spoken three times).
- MAYDAY (spoken three times) THIS IS call sign of station (spoken three times).

23. The word used to indicate that the transmission is ended but a response is expected, is:

- **OVER.**
- GO AHEAD.
- ROGER, OVER AND OUT.
- YOUR TURN.

24. To acknowledge a transmission you should say:

- 10-4.
- I RECEIVE.
- AFFIRMATIVE.
- **ROGER.**

Unofficial convenience copy of A-CR-CCP-804/PG-001, cached 2026-11-08 from https://app.cadets.gc.ca/cadet-publications/A-CR-CCP-804-PG-001/A-CR-CCP-804-PG-001.pdf.
Verify against the official publication.

25. Using the ITU Phonetic Alphabet, how would you spell the word BRAINS:

- BOSTON ROGER APPLE IDA NANCY SUGAR.
- **BRAVO ROMEO ALPHA INDIA NOVEMBER SIERRA.**
- BAKER ROBERTY ABLE ITALY NEW YORK SUSAN.
- BRAVO ROMEO ALPHA NOVEMBER SUZANNE.

Unofficial convenience copy of A-CR-CCP-804/PG-001, cached 2026-11-08 from https://app.cadets.gc.ca/cadet-publications/A-CR-CCP-804-PG-001/A-CR-CCP-804-PG-001.pdf.
Verify against the official publication.

429 PC ASSESSMENT RE-TEST

Cadet's Name: _____ Date: _____

Multiple Choice (25 points)

1. A fine not exceeding $5 000 and costs and / or imprisonment for twelve months is given for:
   - doing radio checks.
   - using 10 code.
   - not having a radio log.
   - transmitting a false or fraudulent distress signal.
2. What special care should be observed when handling and using a microphone?
   - Keep the microphone at the recommended distance as suggested by the operation manual.
   - Keep the microphone very close to your mouth.
   - Keep the microphone at least 20 cm (8 inches) from your mouth.
   - Talk slowly.
3. What word or expression would be used to indicate a transmission error has been made?
   - CORRECTION.
   - MISTAKE.
   - THAT IS WRONG.
   - None of the above.
4. The signal PAN PAN spoken three times indicates:
   - a safety situation.
   - a distress situation.
   - an urgency situation.
   - an imposition of silence.
5. In order of priority, the two most important types of radio transmissions are:
   - distress and government communications.
   - distress and urgency communications.
   - urgency and direction finding communications.
   - distress and safety communications.
6. The maximum penalty for establishing a radio station without a radio licence is:
   - a $50 fine.
   - a $500 fine and up to six months imprisonment.

Unofficial convenience copy of A-CR-CCP-804/PG-001, cached 2026-11-08 from https://app.cadets.gc.ca/cadet-publications/A-CR-CCP-804-PG-001/A-CR-CCP-804-PG-001.pdf.
Verify against the official publication.

- a $5 000 fine and up to six months imprisonment.
- a $5 000 fine and up to 12 months imprisonment.

7. Who issues radio station licenses in Canada?
   - Industry Canada.
   - The Canadian Radio and Television Commission (CRTC).
   - The Post Office.
   - The Department of Communications.

8. The word used to tell another station to proceed with their message is:
   - OVER.
   - READ BACK.
   - GO AHEAD.
   - SAY AGAIN.

9. The term SAY AGAIN means:
   - please repeat your last transmission.
   - unreadable, try again later.
   - error in transmission, please correct.
   - I will relay the message for you.

10. Which of the following expressions follows proper radiotelephone procedures?
    - OVER AND OUT.
    - REPEAT, OVER.
    - CAN YOU SAY AGAIN? OUT.
    - AFFIRMATIVE, OVER.

11. The frequency 121.5 MHz would be spoken as:
    - one twenty one five.
    - wun too wun dayseemal fife.
    - wun too wun fife.
    - one twenty one point five.

12. What other search and rescue frequency is commonly used in conjunction with 121.5 MHz?
    - 323 MHz.
    - 243 MHz.
    - 500 MHz.
    - 122.8 MHz.

Unofficial convenience copy of A-CR-CCP-804/PG-001, cached 2026-11-08 from https://app.cadets.gc.ca/cadet-publications/A-CR-CCP-804-PG-001/A-CR-CCP-804-PG-001.pdf.
Verify against the official publication.

13. In the case of normal communication between a base station and a mobile station:
    - the mobile station cannot call the base first.
    - the mobile station has control of communications.
    - whichever station makes the first call has control of communications.
    - the base station has control of communications.

14. On what radio frequency do you initially make an emergency distress call?
    - the frequency on which you last flew.
    - the ATIS frequency.
    - the current frequency.
    - 121.5 MHz.

15. In the case of distress who controls communications?
    - The aeronautical ground or base station.
    - The aircraft in distress unless it hands over control to another station.
    - No station controls communications.
    - The nearest station.

16. The time of 1:30 AM expressed in the 24-hour system would be:
    - ZERO WUN TREE ZERO.
    - WUN TREE TREE ZERO.
    - THIRTEEN THIRTY HOURS.
    - ZERO WUN THIRTY HOURS.

17. What is the aeronautical distress frequency?
    - 122.80 MHz.
    - 126.70 MHz.
    - 121.5 MHz.
    - 122.90 MHz.

18. Why should you make it a practice to monitor 121.5 MHz just after takeoff or landing?
    - To make sure your receiver is working.
    - To listen for downed aircraft in the vicinity of the airport.
    - To listen for any aircraft safety advisories.
    - To make sure that the ELT in your aircraft has not accidentally triggered during takeoff or landing.

19. The signal MAYDAY indicates:
    - a distress situation.
    - an urgency situation.

Unofficial convenience copy of A-CR-CCP-804/PG-001, cached 2026-11-08 from https://app.cadets.gc.ca/cadet-publications/A-CR-CCP-804-PG-001/A-CR-CCP-804-PG-001.pdf.
Verify against the official publication.

- a safety message will follow.
- normal communication can resume on a restricted basis.

20. Any person aware of a radio communication transmitted other than a broadcasting station or an amateur station is bound by the provisions of the Radiocommunication Act to:

- not to make a tape of such communication.
- report the use of the frequency to the nearest Department of Communication District Office.
- enter the details of the intercept in the station log.
- preserve the secrecy of correspondence.

21. The distinctive call sign issued to radio stations should be used:

- every three minutes.
- during poor conditions.
- only during emergency situations.
- at least when initial contact is established.

22. The figure 600 would be transmitted as:

- SIX HUNDRED.
- SIX OH OH.
- SIX ZERO ZERO.
- none of the above.

23. The order of priority for transmission in the aeronautical service is:

- distress, flight safety, and weather warnings.
- distress, urgency, and communications relating to radio direction findings.
- distress, urgency, and flight safety.
- distress, urgency, and safety communications.

24. Signal checks should:

- not last more than 10 seconds.
- be exchanged on Channel 16.
- last as long as the operator wishes.
- Both B and C.

Unofficial convenience copy of A-CR-CCP-804/PG-001, cached 2026-11-08 from https://app.cadets.gc.ca/cadet-publications/A-CR-CCP-804-PG-001/A-CR-CCP-804-PG-001.pdf.
Verify against the official publication.

1. Using the ITU Phonetic Alphabet, how would you spell the word BRAINS:
   - BOSTON ROGER APPLE IDA NANCY SUGAR.
   - BRAVO ROMEO ALPHA INDIA NOVEMBER SIERRA.
   - BAKER ROBERTY ABLE ITALY NEW YORK SUSAN.
   - BRAVO ROMEO ALPHA NOVEMBER SUZANNE.

This form shall be reproduced locally.

Unofficial convenience copy of A-CR-CCP-804/PG-001, cached 2026-11-08 from https://app.cadets.gc.ca/cadet-publications/A-CR-CCP-804-PG-001/A-CR-CCP-804-PG-001.pdf.
Verify against the official publication.

429 PC ASSESSMENT RE-TEST ANSWER KEY

Multiple Choice (25 points)

1. A fine not exceeding $5 000 and costs and / or imprisonment for twelve months is given for:
   - doing radio checks.
   - using 10 code.
   - not having a radio log.
   - **transmitting a false or fraudulent distress signal.**

2. What special care should be observed when handling and using a microphone?
   - Keep the microphone at the recommended distance as suggested by the operation manual.
   - Keep the microphone very close to your mouth.
   - Keep the microphone at least 20 cm (8 inches) from your mouth.
   - **Talk slow.**

3. What word or expression would be used to indicate a transmission error has been made?
   - **CORRECTION.**
   - MISTAKE.
   - THAT IS WRONG.
   - none of the above.

4. The signal PAN PAN spoken three times indicates:
   - a safety situation.
   - a distress situation.
   - **an urgency situation.**
   - an imposition of silence.

5. In order of priority, the two most important types of radio transmissions are:
   - distress and government communications.
   - **distress and urgency communications.**
   - urgency and direction finding communications.
   - distress and safety communications.

6. The maximum penalty for establishing a radio station without a radio licence is:
   - a $50 fine.
   - a $500 fine and up to six months imprisonment.
   - a $5 000 fine and up to six months imprisonment.
   - **a $5 000 fine and up to 12 months imprisonment.**

Unofficial convenience copy of A-CR-CCP-804/PG-001, cached 2026-11-08 from https://app.cadets.gc.ca/cadet-publications/A-CR-CCP-804-PG-001/A-CR-CCP-804-PG-001.pdf.
Verify against the official publication.

7. Who issues radio station licenses in Canada?

   - **Industry Canada.**
   - The Canadian Radio and Television Commission (CRTC).
   - The Post Office.
   - The Department of Communications.

8. The word used to tell another station to proceed with their message is:

   - OVER.
   - READ BACK.
   - **GO AHEAD.**
   - SAY AGAIN.

9. The term SAY AGAIN means:

   - **please repeat your last transmission.**
   - unreadable, try again later.
   - error in transmission, please correct.
   - I will relay the message for you.

10. Which of the following expressions follows proper radiotelephone procedures?

    - OVER AND OUT.
    - REPEAT, OVER.
    - CAN YOU SAY AGAIN? OUT.
    - **AFFIRMATIVE, OVER.**

11. The frequency 121.5 MHz would be spoken as:

    - one twenty one five.
    - **wun too wun dayseemal fife.**
    - wun too wun fife.
    - one twenty one point five.

12. What other search and rescue frequency is commonly used in conjunction with 121.5 MHz?

    - 323 MHz.
    - **243 MHz.**
    - 500 MHz.
    - 122.8 MHz.

13. In the case of normal communication between a base station and a mobile station:

    - the mobile station cannot call the base first.
    - the mobile station has control of communications.

Unofficial convenience copy of A-CR-CCP-804/PG-001, cached 2026-11-08 from https://app.cadets.gc.ca/cadet-publications/A-CR-CCP-804-PG-001/A-CR-CCP-804-PG-001.pdf.
Verify against the official publication.

- whichever station makes the first call has control of communications.
- **the base station has control of communications.**

14. On what radio frequency do you initially make an emergency distress call?
    - the frequency on which you last flew.
    - the ATIS frequency.
    - **the current frequency.**
    - 121.5 MHz.

15. In the case of distress who controls communications?
    - The aeronautical ground or base station.
    - **The aircraft in distress unless it hands over control to another station.**
    - No station controls communications.
    - The nearest station.

16. The time of 1:30 AM expressed in the 24-hour system would be:
    - **ZERO WUN TREE ZERO.**
    - WUN TREE TREE ZERO.
    - THIRTEEN THIRTY HOURS.
    - ZERO WUN THIRTY HOURS.

17. What is the aeronautical distress frequency?
    - 122.80 MHz.
    - 126.70 MHz.
    - **121.5 MHz.**
    - 122.90 MHz.

18. Why should you make it a practice to monitor 121.5 MHz just after takeoff or landing?
    - To make sure your receiver is working.
    - To listen for downed aircraft in the vicinity of the airport.
    - To listen for any aircraft safety advisories.
    - **To make sure that the ELT in your aircraft has not accidentally triggered during takeoff or landing.**

19. The signal MAYDAY indicates:
    - **a distress situation.**
    - an urgency situation.
    - a safety message will follow.
    - normal communication can resume on a restricted basis.

Unofficial convenience copy of A-CR-CCP-804/PG-001, cached 2026-11-08 from https://app.cadets.gc.ca/cadet-publications/A-CR-CCP-804-PG-001/A-CR-CCP-804-PG-001.pdf.
Verify against the official publication.

20. Any person aware of a radio communication transmitted other than a broadcasting station or an amateur station is bound by the provisions of the Radiocommunication Act to:

- not to make a tape of such communication.
- report the use of the frequency to the nearest Department of Communication District Office.
- enter the details of the intercept in the station log.
- **preserve the secrecy of correspondence.**

21. The distinctive call sign issued to radio stations should be used:

- every three minutes.
- during poor conditions.
- only during emergency situations.
- **at least when initial contact is established.**

22. The figure 600 would be transmitted as:

- SIX HUNDRED.
- SIX OH OH.
- **SIX ZERO ZERO.**
- none of the above.

23. The order of priority for transmission in the aeronautical service is:

- distress, flight safety, and weather warnings.
- distress, urgency, and communications relating to radio direction findings.
- distress, urgency, and flight safety.
- **distress, urgency, and safety communications.**

24. Signal checks should:

- **not last more than 10 seconds.**
- be exchanged on Channel 16.
- last as long as the operator wishes.
- Both B and C.

25. Using the ITU Phonetic Alphabet, how would you spell the word BRAINS:

- BOSTON ROGER APPLE IDA NANCY SUGAR.
- **BRAVO ROMEO ALPHA INDIA NOVEMBER SIERRA.**
- BAKER ROBERTY ABLE ITALY NEW YORK SUSAN.
- BRAVO ROMEO ALPHA NOVEMBER SUZANNE.

Unofficial convenience copy of A-CR-CCP-804/PG-001, cached 2026-11-08 from https://app.cadets.gc.ca/cadet-publications/A-CR-CCP-804-PG-001/A-CR-CCP-804-PG-001.pdf.
Verify against the official publication.

THIS PAGE INTENTIONALLY LEFT BLANK

Unofficial convenience copy of A-CR-CCP-804/PG-001, cached 2026-11-08 from https://app.cadets.gc.ca/cadet-publications/A-CR-CCP-804-PG-001/A-CR-CCP-804-PG-001.pdf.
Verify against the official publication.

ANNEX B, APPENDIX 6

AVIATION SUBJECTS–COMBINED ASSESSMENT PC

ASSESSMENT INSTRUCTIONS

PREPARATION

PRE-ASSESSMENT INSTRUCTIONS

Review the assessment plan, assessment instructions and Aviation Subjects–Combined Assessment PC and become familiar with the material prior to conducting the assessment.

Photocopy the Assessment Tool for each cadet.

PRE-ASSESSMENT ASSIGNMENT

Nil.

ASSESSMENT METHOD

A selected response assessment was chosen to assess the cadet's knowledge of the principles of flight, aero engines, meteorology and navigation.

CONDUCT OF ASSESSMENT

PURPOSE

The purpose of this PC is to assess the cadet’s knowledge of aviation subjects including principles of flight, aero engines, meteorology, and navigation.

RESOURCES

- Aviation Subjects–Combined Assessment PC, and
- Pen / pencil.

ASSESSMENT ACTIVITY LAYOUT

This assessment shall be conducted in a classroom. Desks shall be separated as much as possible.



Criteria for assessing the cadet's knowledge are:

- Incomplete. Less than 60 percent.
- Completed with difficulty. 60–74 percent.
- Completed without difficulty. 75–89 percent.
- Exceeded standard. 90–100 percent.

ASSESSMENT ACTIVITY INSTRUCTIONS

1. Distribute a pen / pencil to each cadet.
2. Distribute the Assessment Tool to each cadet face up and instruct them to begin only when told to do so.

Unofficial convenience copy of A-CR-CCP-804/PG-001, cached 2026-11-08 from https://app.cadets.gc.ca/cadet-publications/A-CR-CCP-804-PG-001/A-CR-CCP-804-PG-001.pdf.
Verify against the official publication.

3. Explain the structure of the Assessment Tool.
4. Have the cadets write their names on the top of the Assessment Tool.
5. Have the cadets write the Assessment Tool.
6. Give the cadets a 10-minute warning.
7. Give the cadets a 5-minute warning.
8. Collect the Assessment Tools.

POST ASSESSMENT INSTRUCTIONS

RECORDING ASSESSMENT RESULTS

The overall rating for Aviation Subjects–Combined Assessment PC will be recorded on the Proficiency Level Four Qualification Record located at Chapter 3, Annex C.

PROVIDING ASSESSMENT FEEDBACK

Inform each cadet of their grade. No debriefing is required for those cadets who score 60 percent or more on the Assessment Tool. Cadets who score less than 60 percent will be debriefed individually. Those cadets are required to write a re-test. Any cadets who require a re-test must be tutored prior to the re-test. The content of the tutoring session will vary depending on the cadet. The aim of this session is to review the mistakes made in the original assessment and to prepare the cadet for the re-test.

Unofficial convenience copy of A-CR-CCP-804/PG-001, cached 2026-11-08 from https://app.cadets.gc.ca/cadet-publications/A-CR-CCP-804-PG-001/A-CR-CCP-804-PG-001.pdf.
Verify against the official publication.

AVIATION SUBJECTS–COMBINED ASSESSMENT PC

Cadet's Name: _____ Date: _____

Part A–Multiple Choice (43 points)

1. The very thin layer of air lying over the surface of the wing is called the _____ layer.

   - transition.
   - boundary.
   - turbulent.
   - laminar.

2. Conventional airfoils are generally the thickest at _____ percent of the chord.

   - 15.
   - 25.
   - 50.
   - 65.

3. Laminar flow airfoils reduce drag by maintaining the _____ flow of air throughout a greater percentage of the _____.

   - turbulent, chord.
   - turbulent, span.
   - laminar, chord.
   - laminar, span.

4. Aspect ratio is calculated by:

   - dividing the span by the average chord.
   - dividing the average chord by the span.
   - dividing the weight by the coefficient of lift.
   - dividing the weight by the coefficient of drag.

5. Decreasing the angle of incidence at the wing tip is called:

   - wash-in.
   - wash-up.
   - wash-out.
   - wash-off.

6. Which of the following is not a wing-tip modification designed to increase lift / reduce drag?

   - Wing-tip fuel tanks.
   - Winglets.

Unofficial convenience copy of A-CR-CCP-804/PG-001, cached 2026-11-08 from https://app.cadets.gc.ca/cadet-publications/A-CR-CCP-804-PG-001/A-CR-CCP-804-PG-001.pdf.
Verify against the official publication.

- Drooping the wing tips.
- Wing fences.

7. Auxiliary airfoils that move out in front of the leading edge at high angles of attack are called:
   - slats.
   - flaps.
   - wing fences.
   - slots.

8. Passages built into the wing that affect the airflow in the same way as slats are called:
   - slats.
   - flaps.
   - wing fences.
   - slots.

9. The curvature of an airfoil is also called:
   - chord.
   - span.
   - rib.
   - camber.

10. What colour-coded arcs are found on the tachometer?
    - Green, orange, red.
    - Blue, red, green.
    - Green, yellow, red.
    - Black, white, red.

11. The altimeter is connected to both the pitot pressure source and the static pressure port.
    - True.
    - False.

12. Density errors in the ASI are caused by:
    - an increase in the temperature of the air as the density increases.
    - a decrease in the temperature of the air as the altitude decreases.
    - blockages of the pitot static system due to the density of the air.
    - a decrease in the density of the air as the altitude increases.

13. The CAS corrected for the compressibility factor is the:
    - CAS.
    - IAS.

Unofficial convenience copy of A-CR-CCP-804/PG-001, cached 2026-11-08 from https://app.cadets.gc.ca/cadet-publications/A-CR-CCP-804-PG-001/A-CR-CCP-804-PG-001.pdf.
Verify against the official publication.

- TAS.
- EAS.

14. When flying into an area with a relatively lower pressure, if the altimeter setting is not corrected, the altimeter will read:

- lower than the actual altitude.
- higher than the actual altitude.
- the correct altitude, provided that the pilot maintains a constant airspeed.
- the correct altitude, provided that the pilot maintains a constant angle of bank.

15. Density altitude is:

- the altitude displayed on the altimeter when it is set to 29.92 inches of mercury.
- the actual height above Earth's surface.
- the pressure altitude corrected for temperature.
- the pressure altitude corrected for absolute errors.

16. The VSI measures the rate of change of the static pressure and indicates if the altitude is increasing or decreasing.

- True.
- False.

17. Precession is:

- the tendency of a rotating body, when a force is applied perpendicular to its plane of rotation, to turn in the direction of its rotation 90 degrees to its axis and take up a new plane of rotation parallel to the force applied.
- the tendency of a rotating object to remain in its plane of rotation.
- the tendency of a rotating body, when a force is applied parallel to its plane of rotation, to turn in the direction of its rotation 90 degrees to its axis and take up a new plane of rotation perpendicular to the force applied.
- the tendency of a rotating object to move from its plane of rotation.

18. The Mach number is calculated by:

- dividing the speed of sound by the airspeed.
- multiplying the speed of sound by the airspeed.
- dividing the airspeed by the speed of sound.
- multiplying the airspeed by the speed of sound and adding the inverse of the Mach index.

19. What does the fuel selector valve, used by the pilot, do?

- Transfer fuel.
- Select desired fuel tank to draw fuel.

Unofficial convenience copy of A-CR-CCP-804/PG-001, cached 2026-11-08 from https://app.cadets.gc.ca/cadet-publications/A-CR-CCP-804-PG-001/A-CR-CCP-804-PG-001.pdf.
Verify against the official publication.

- Shut off the flow of fuel from the tanks.
- Both B and C.

20. Forward movement of the throttle closes the throttle valve, which decreases the fuel / air mixture, and increases the power being produced by the engine.

- True.
- False.

21. Which two gauges measure the properties of the engine oil?

- Oil pressure and cylinder head temperature gauges.
- Oil temperature and outside air temperature gauges.
- Oil pressure and oil temperature gauges.
- Oil temperature and oil viscosity gauges.

22. What is maintained throughout most of the diameter of the propeller by means of the variation in airfoil sections and the angle of attack?

- Pitch.
- Drag.
- Thrust.
- Dihedral.

23. What is the distance a propeller travels forward in one revolution?

- Pitch.
- Drag.
- Thrust.
- Dihedral.

24. What reading will register on the manifold pressure gauge when the engine is not running?

- Engine power.
- Atmospheric pressure.
- Air temperature.
- Compression pressure.

25. What occurs to an engine as the altitude increases and the air becomes less dense?

- Power increases.
- Power remains stable.
- Power decreases.
- Engine stops.

Unofficial convenience copy of A-CR-CCP-804/PG-001, cached 2026-11-08 from https://app.cadets.gc.ca/cadet-publications/A-CR-CCP-804-PG-001/A-CR-CCP-804-PG-001.pdf.
Verify against the official publication.

26. What effect does surface friction have on winds?

- None.
- It causes winds to back and veer.
- It causes an increase in wind speeds.
- It causes lower wind speeds than would be expected from the pressure gradient.

27. An air mass is a large section of the troposphere with uniform properties of _____ and _____ in the _____.

- temperature, pressure, horizontal.
- pressure, moisture, horizontal.
- temperature, moisture, horizontal.
- temperature, moisture, vertical.

28. A katabatic wind:

- is the term for down slope winds flowing from high elevations down the slopes to valleys below.
- is the term for up slope winds flowing from valleys up the slopes to high elevations above.
- is the term for winds flowing from land to large bodies of water.
- is the term for winds flowing from large bodies of water to land.

29. An anabatic wind:

- is the term for down slope winds flowing from high elevations down the slopes to valleys below.
- is the term for up slope winds flowing from valleys up the slopes to high elevations above.
- is the term for winds flowing from land to large bodies of water.
- is the term for winds flowing from large bodies of water to land.

30. A gust is:

- a gradual change of wind direction associated with a change in altitude.
- a rapid and irregular change of wind speed.
- a regular and predictable change of wind speed.
- not considered important when learning about meteorology.

31. The three main factors that determine the weather in an air mass are:

- the moisture content, the temperature, and the stability of the air.
- the presence of condensation nuclei, the ambient pressure, and the altitude of the isothermal layer.
- the moisture content, the cooling process, and the altitude of the isothermal layer.
- the moisture content, the cooling process, and the stability of the air.

Unofficial convenience copy of A-CR-CCP-804/PG-001, cached 2026-11-08 from https://app.cadets.gc.ca/cadet-publications/A-CR-CCP-804-PG-001/A-CR-CCP-804-PG-001.pdf.
Verify against the official publication.

32. In stable air:

- stratus cloud and poor visibility are common.
- cumulus cloud and good visibility are common.

33. In unstable air:

- stratus cloud and poor visibility are common.
- cumulus cloud and good visibility are common.

34. A _____ air mass is more dense and therefore _____, undercutting a _____ air mass which will _____ over the cold air.

- warm, sinks, cold, ascend.
- cold, sinks, warm, ascend.
- cold, ascends, warm, sink.
- warm, ascends, cold, sink.

35. The shortest distance between two points on the surface of the Earth is represented by:

- a rhumb line.
- true heading.
- magnetic meridian.
- a great circle.

36. The angle between true heading and magnetic heading is:

- variation.
- magnetic dip.
- deviation.
- turning error.

37. A compass heading is:

- magnetic heading minus west deviation.
- magnetic heading plus west deviation.
- true heading minus west deviation.
- true heading plus west deviation.

38. Lines drawn on a chart joining places having the same variation are:

- isobaric lines.
- isogonic lines.
- agonic lines.
- rhumb lines.

Unofficial convenience copy of A-CR-CCP-804/PG-001, cached 2026-11-08 from https://app.cadets.gc.ca/cadet-publications/A-CR-CCP-804-PG-001/A-CR-CCP-804-PG-001.pdf.
Verify against the official publication.

39. On east and west headings, deceleration causes the compass to register a turn toward:

- north.
- south.
- east.
- west.

40. Meridians of longitude are:

- measured from 0–90 degrees east and west of the prime meridian.
- semi-great circles joining the geographic poles of the Earth.
- measured in hours, minutes, and seconds.
- all of the above.

41. Parallels of latitude are:

- circles on the Earth's surface that lie parallel to the equator.
- measured from 0–90 degrees north and south of the equator.
- measured in degrees, minutes, and seconds.
- all of the above.

42. The advantage of the rhumb line route is:

- it is the shortest distance between two points on the surface of the Earth.
- it can be followed at higher altitudes than great circle routes.
- the direction is constant, allowing a navigator to follow a constant heading.
- it is the most fuel-efficient route, especially when travelling from east to west.

43. Lines joining places of zero magnetic variation are:

- agonic lines.
- isogonic lines.
- isobar lines.
- lines of longitude.

Unofficial convenience copy of A-CR-CCP-804/PG-001, cached 2026-11-08 from https://app.cadets.gc.ca/cadet-publications/A-CR-CCP-804-PG-001/A-CR-CCP-804-PG-001.pdf.
Verify against the official publication.

Part B–Diagrams (7 points)

- Label the following parts on the diagram below.
  - Left tank
  - Right tank
  - Vent
  - Selector valve
  - Primer
  - Strainer
  - Carburetor

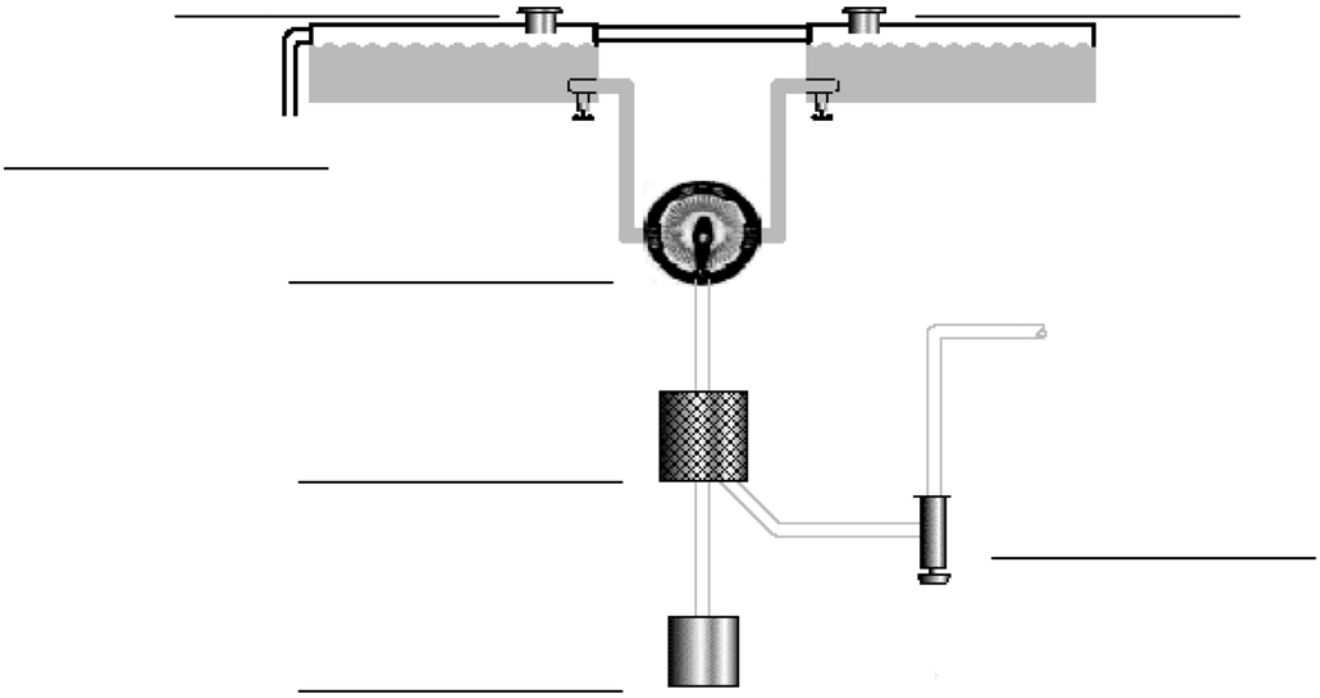

This form shall be reproduced locally.

Unofficial convenience copy of A-CR-CCP-804/PG-001, cached 2026-11-08 from https://app.cadets.gc.ca/cadet-publications/A-CR-CCP-804-PG-001/A-CR-CCP-804-PG-001.pdf.
Verify against the official publication.

AVIATION SUBJECTS–COMBINED ASSESSMENT PC

ANSWER KEY

Part A–Multiple Choice (43 points)

1. The very thin layer of air lying over the surface of the wing is called the _____ layer.

   - transition.
   - **boundary.**
   - turbulent.
   - laminar.

2. Conventional airfoils are generally the thickest at _____ percent of the chord.

   - 15.
   - **25.**
   - 50.
   - 65.

3. Laminar flow airfoils reduce drag by maintaining the _____ flow of air throughout a greater percentage of the _____.

   - turbulent, chord.
   - turbulent, span.
   - **laminar, chord.**
   - laminar, span.

4. Aspect ratio is calculated by:

   - **dividing the span by the average chord.**
   - dividing the average chord by the span.
   - dividing the weight by the coefficient of lift.
   - dividing the weight by the coefficient of drag.

5. Decreasing the angle of incidence at the wing tip is called:

   - wash-in.
   - wash-up.
   - **wash-out.**
   - wash-off.

6. Which of the following is not a wing-tip modification designed to increase lift / reduce drag?

   - Wing-tip fuel tanks.
   - Winglets.

Unofficial convenience copy of A-CR-CCP-804/PG-001, cached 2026-11-08 from https://app.cadets.gc.ca/cadet-publications/A-CR-CCP-804-PG-001/A-CR-CCP-804-PG-001.pdf.
Verify against the official publication.

- Drooping the wing tips.
- **Wing fences.**

7. Auxiliary airfoils that move out in front of the leading edge at high angles of attack are called:
   - **slats.**
   - flaps.
   - wing fences.
   - slots.

8. Passages built into the wing that affect the airflow in the same way as slats are called:
   - slats.
   - flaps.
   - wing fences.
   - **slots.**

9. The curvature of an airfoil is also called:
   - chord.
   - span.
   - rib.
   - **camber.**

10. What colour-coded arcs are found on the tachometer?
    - Green, orange, red.
    - Blue, red, green.
    - **Green, yellow, red.**
    - Black, white, red.

11. The altimeter is connected to both the pitot pressure source and the static pressure port.
    - True.
    - **False.**

12. Density errors in the ASI are caused by:
    - an increase in the temperature of the air as the density increases.
    - a decrease in the temperature of the air as the altitude decreases.
    - blockages of the pitot static system due to the density of the air.
    - **a decrease in the density of the air as the altitude increases.**

13. The CAS corrected for the compressibility factor is the:
    - CAS.
    - IAS.

Unofficial convenience copy of A-CR-CCP-804/PG-001, cached 2026-11-08 from https://app.cadets.gc.ca/cadet-publications/A-CR-CCP-804-PG-001/A-CR-CCP-804-PG-001.pdf.
Verify against the official publication.

- TAS.
- **EAS.**

14. When flying into an area with a relatively lower pressure, if the altimeter setting is not corrected, the altimeter will read:

- lower than the actual altitude.
- **higher than the actual altitude.**
- the correct altitude, provided that the pilot maintains a constant airspeed.
- the correct altitude, provided that the pilot maintains a constant angle of bank.

15. Density altitude is:

- the altitude displayed on the altimeter when it is set to 29.92 inches of mercury.
- the actual height above Earth's surface.
- **the pressure altitude corrected for temperature.**
- the pressure altitude corrected for absolute errors.

16. The VSI measures the rate of change of the static pressure and indicates if the altitude is increasing or decreasing.

- **True.**
- False.

17. Precession is:

- **the tendency of a rotating body, when a force is applied perpendicular to its plane of rotation, to turn in the direction of its rotation 90 degrees to its axis and take up a new plane of rotation parallel to the force applied.**
- the tendency of a rotating object to remain in its plane of rotation.
- the tendency of a rotating body, when a force is applied parallel to its plane of rotation, to turn in the direction of its rotation 90 degrees to its axis and take up a new plane of rotation perpendicular to the force applied.
- the tendency of a rotating object to move from its plane of rotation.

18. The Mach number is calculated by:

- dividing the speed of sound by the airspeed.
- multiplying the speed of sound by the airspeed.
- **dividing the airspeed by the speed of sound.**
- multiplying the airspeed by the speed of sound and adding the inverse of the Mach index.

19. What does the fuel selector valve, used by the pilot, do?

- Transfer fuel.
- Select desired fuel tank to draw fuel.

Unofficial convenience copy of A-CR-CCP-804/PG-001, cached 2026-11-08 from https://app.cadets.gc.ca/cadet-publications/A-CR-CCP-804-PG-001/A-CR-CCP-804-PG-001.pdf.
Verify against the official publication.

- Shut off the flow of fuel from the tanks.
- **Both B and C.**

20. Forward movement of the throttle closes the throttle valve, which decreases the fuel / air mixture, and increases the power being produced by the engine.

- True.
- **False.**

21. Which two gauges measure the properties of the engine oil?

- Oil pressure and cylinder head temperature gauges.
- Oil temperature and outside air temperature gauges.
- **Oil pressure and oil temperature gauges.**
- Oil temperature and oil viscosity gauges.

22. What is maintained throughout most of the diameter of the propeller by means of the variation in airfoil sections and the angle of attack?

- Pitch.
- Drag.
- **Thrust.**
- Dihedral.

23. What is the distance a propeller travels forward in one revolution?

- **Pitch.**
- Drag.
- Thrust.
- Dihedral.

24. What reading will register on the manifold pressure gauge when the engine is not running?

- Engine power.
- **Atmospheric pressure.**
- Air temperature.
- Compression pressure.

25. What occurs to an engine as the altitude increases and the air becomes less dense?

- Power increases.
- Power remains stable.
- **Power decreases.**
- Engine stops.

Unofficial convenience copy of A-CR-CCP-804/PG-001, cached 2026-11-08 from https://app.cadets.gc.ca/cadet-publications/A-CR-CCP-804-PG-001/A-CR-CCP-804-PG-001.pdf.
Verify against the official publication.

26. What effect does surface friction have on winds?

- None.
- It causes winds to back and veer.
- It causes an increase in wind speeds.
- **It causes lower wind speeds than would be expected from the pressure gradient.**

27. An air mass is a large section of the troposphere with uniform properties of _____ and _____ in the _____.

- temperature, pressure, horizontal
- pressure, moisture, horizontal
- **temperature, moisture, horizontal**
- temperature, moisture, vertical

28. A katabatic wind:

- **is the term for down slope winds flowing from high elevations down the slopes to valleys below.**
- is the term for up slope winds flowing from valleys up the slopes to high elevations above.
- is the term for winds flowing from land to large bodies of water.
- is the term for winds flowing from large bodies of water to land.

29. An anabatic wind:

- is the term for down slope winds flowing from high elevations down the slopes to valleys below.
- **is the term for up slope winds flowing from valleys up the slopes to high elevations above.**
- is the term for winds flowing from land to large bodies of water.
- is the term for winds flowing from large bodies of water to land.

30. A gust is:

- a gradual change of wind direction associated with a change in altitude.
- **a rapid and irregular change of wind speed.**
- a regular and predictable change of wind speed.
- not considered important when learning about meteorology.

31. The three main factors that determine the weather in an air mass are:

- the moisture content, the temperature, and the stability of the air.
- the presence of condensation nuclei, the ambient pressure, and the altitude of the isothermal layer.
- the moisture content, the cooling process, and the altitude of the isothermal layer.
- **the moisture content, the cooling process, and the stability of the air.**

Unofficial convenience copy of A-CR-CCP-804/PG-001, cached 2026-11-08 from https://app.cadets.gc.ca/cadet-publications/A-CR-CCP-804-PG-001/A-CR-CCP-804-PG-001.pdf.
Verify against the official publication.

32. In stable air:

- **stratus cloud and poor visibility are common.**
- cumulus cloud and good visibility are common.

33. In unstable air:

- stratus cloud and poor visibility are common.
- **cumulus cloud and good visibility are common.**

34. A _____ air mass is more dense and therefore _____, undercutting a _____ air mass which will _____ over the cold air.

- warm, sinks, cold, ascend.
- **cold, sinks, warm, ascend.**
- cold, ascends, warm, sink.
- warm, ascends, cold, sink.

35. The shortest distance between two points on the surface of the Earth is represented by:

- a rhumb line.
- true heading.
- magnetic meridian.
- **a great circle.**

36. The angle between true heading and magnetic heading is:

- **variation.**
- magnetic dip.
- deviation.
- turning error.

37. A compass heading is:

- magnetic heading minus west deviation.
- **magnetic heading plus west deviation.**
- true heading minus west deviation.
- true heading plus west deviation.

38. Lines drawn on a chart joining places having the same variation are:

- isobaric lines.
- **isogonic lines.**
- agonic lines.
- rhumb lines.

Unofficial convenience copy of A-CR-CCP-804/PG-001, cached 2026-11-08 from https://app.cadets.gc.ca/cadet-publications/A-CR-CCP-804-PG-001/A-CR-CCP-804-PG-001.pdf.
Verify against the official publication.

39. On east and west headings, deceleration causes the compass to register a turn toward:

- north.
- **south.**
- east.
- west.

40. Meridians of longitude are:

- measured from 0–90 degrees east and west of the prime meridian.
- **semi-great circles joining the geographic poles of the Earth.**
- measured in hours, minutes, and seconds.
- all of the above.

41. Parallels of latitude are:

- circles on the Earth's surface that lie parallel to the equator.
- measured from 0–90 degrees north and south of the equator.
- measured in degrees, minutes, and seconds.
- **all of the above.**

42. The advantage of the rhumb line route is:

- it is the shortest distance between two points on the surface of the Earth.
- it can be followed at higher altitudes than great circle routes.
- **the direction is constant, allowing a navigator to follow a constant heading.**
- it is the most fuel-efficient route, especially when travelling from east to west.

43. Lines joining places of zero magnetic variation are:

- **agonic lines.**
- isogonic lines.
- isobar lines.
- lines of longitude.

Unofficial convenience copy of A-CR-CCP-804/PG-001, cached 2026-11-08 from https://app.cadets.gc.ca/cadet-publications/A-CR-CCP-804-PG-001/A-CR-CCP-804-PG-001.pdf.
Verify against the official publication.

Part B–Diagrams (7 points)

1. Label the following parts on the diagram below.

    a. Left tank

    b. Right tank

    c. Vent

    d. Selector valve

    e. Primer

    f. Strainer

    g. Carburetor

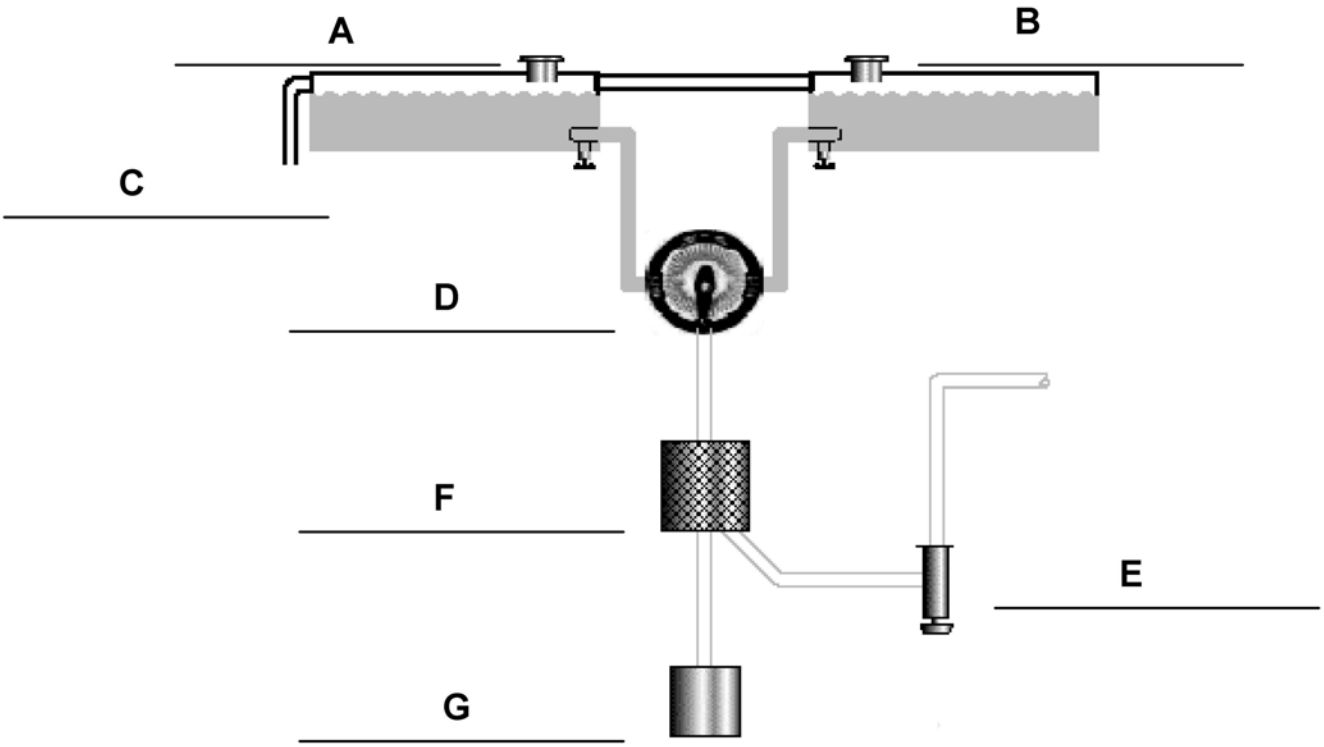

Unofficial convenience copy of A-CR-CCP-804/PG-001, cached 2026-11-08 from https://app.cadets.gc.ca/cadet-publications/A-CR-CCP-804-PG-001/A-CR-CCP-804-PG-001.pdf.
Verify against the official publication.

AVIATION SUBJECTS–COMBINED ASSESSMENT PC

REWRITE

Cadet's Name: _____ Date: _____

Part A–Multiple Choice (45 points)

1. Laminar airfoils are generally the thickest at _____ percent of the chord.

   - 15.
   - 25.
   - 50.
   - 65.

2. Laminar flow airfoils reduce drag by maintaining the _____ flow of air throughout a greater percentage of the _____.

   - turbulent, chord.
   - turbulent, span.
   - laminar, chord.
   - laminar, span.

3. Aspect ratio is calculated by:

   - dividing the span by the average chord.
   - dividing the average chord by the span.
   - dividing the weight by the coefficient of lift.
   - dividing the weight by the coefficient of drag.

4. Increasing the angle of incidence at the wing tip is called:

   - wash-in.
   - wash-up.
   - wash-out.
   - wash-off.

5. Which of the following is not a wing-tip modification designed to increase lift / reduce drag?

   - Wing-tip fuel tanks.
   - Winglets.
   - Drooping the wing tips.
   - Wing fences.

Unofficial convenience copy of A-CR-CCP-804/PG-001, cached 2026-11-08 from https://app.cadets.gc.ca/cadet-publications/A-CR-CCP-804-PG-001/A-CR-CCP-804-PG-001.pdf.
Verify against the official publication.

6. Auxiliary airfoils that move out in front of the leading edge at high angles of attack are called:
   - slats.
   - flaps.
   - wing fences.
   - slots.

7. Passages built into the wing that affect the airflow in the same way as slats are called:
   - slats.
   - flaps.
   - wing fences.
   - slots.

8. In addition to creating lift, flaps also create:
   - thrust.
   - weight.
   - trim.
   - drag.

9. The curvature of an airfoil is also called:
   - chord.
   - span.
   - rib.
   - camber.

10. Pitot pressure is the atmospheric pressure outside the aircraft, not affected by turbulence or motion.
    - True.
    - False.

11. The ASI is connected to both the pitot pressure source and the static pressure port.
    - True.
    - False.

12. Density errors in the ASI are caused by:
    - an increase in the temperature of the air as the density increases.
    - a decrease in the temperature of the air as the altitude decreases.
    - blockages of the pitot static system due to the density of the air.
    - a decrease in the density of the air as the altitude increases.

Unofficial convenience copy of A-CR-CCP-804/PG-001, cached 2026-11-08 from https://app.cadets.gc.ca/cadet-publications/A-CR-CCP-804-PG-001/A-CR-CCP-804-PG-001.pdf.
Verify against the official publication.

13. The IAS corrected for instrument and position errors is the:

- CAS.
- IAS.
- TAS.
- EAS.

14. When flying into an area with a relatively higher pressure, if the altimeter setting is not corrected, the altimeter will read:

- lower than the actual altitude.
- higher than the actual altitude.
- the correct altitude, provided that the pilot maintains a constant airspeed.
- the correct altitude, provided that the pilot maintains a constant angle of bank.

15. Density altitude is:

- the altitude displayed on the altimeter when it is set to 29.92 inches of mercury.
- the actual height above Earth's surface.
- the pressure altitude corrected for temperature.
- the pressure altitude corrected for absolute errors.

16. The VSI measures the rate of change of the pitot pressure and indicates if the altitude is increasing or decreasing.

- True.
- False.

17. Gyroscopic inertia is also known as:

- precession.
- rigidity in space.
- fluidity in space.
- rotation.

18. Precession is:

- the tendency of a rotating body, when a force is applied perpendicular to its plane of rotation, to turn in the direction of its rotation 90 degrees to its axis and take up a new plane of rotation parallel to the force applied.
- the tendency of a rotating object to remain in its plane of rotation.
- the tendency of a rotating body, when a force is applied parallel to its plane of rotation, to turn in the direction of its rotation 90 degrees to its axis and take up a new plane of rotation perpendicular to the force applied.
- the tendency of a rotating object to move from its plane of rotation.

Unofficial convenience copy of A-CR-CCP-804/PG-001, cached 2026-11-08 from https://app.cadets.gc.ca/cadet-publications/A-CR-CCP-804-PG-001/A-CR-CCP-804-PG-001.pdf.
Verify against the official publication.

19. Where should the fuel tank be positioned in a gravity feed system?

- Above the carburetor.
- Below the carburetor.
- In-line with the carburetor.
- Below the centre of gravity.

20. What does the fuel selector valve, used by the pilot, do?

- Transfer fuel.
- Select desired fuel tank to draw fuel.
- Shut off the flow of fuel from the tanks.
- Both B and C.

21. Forward movement of the throttle opens the throttle valve, which increases the fuel / air mixture, and increases the power being produced by the engine.

- True.
- False.

22. Which two gauges measure the properties of the engine oil?

- Oil pressure and cylinder head temperature gauges.
- Oil temperature and outside air temperature gauges.
- Oil pressure and oil temperature gauges.
- Oil temperature and oil viscosity gauges.

23. What is maintained throughout most of the diameter of the propeller by means of the variation in airfoil sections and the angle of attack?

- Pitch.
- Drag.
- Thrust.
- Dihedral.

24. What is the distance a propeller travels forward in one revolution?

- Pitch.
- Drag.
- Thrust.
- Dihedral.

25. What colour-coded arcs are found on the tachometer?

- Green, orange, red.
- Blue, red, green.

Unofficial convenience copy of A-CR-CCP-804/PG-001, cached 2026-11-08 from https://app.cadets.gc.ca/cadet-publications/A-CR-CCP-804-PG-001/A-CR-CCP-804-PG-001.pdf.
Verify against the official publication.

- Green, yellow, red.
- Black, white, red.

26. What reading will register on the manifold pressure gauge when the engine is not running?

- Engine power.
- Atmospheric pressure.
- Air temperature.
- Compression pressure.

27. What occurs to an engine as the altitude increases and the air becomes less dense?

- Power increases.
- Power remains stable.
- Power decreases.
- Engine stops.

28. What effect does surface friction have on winds?

- None.
- It causes winds to back and veer.
- It causes an increase in wind speeds.
- It causes lower wind speeds than would be expected from the pressure gradient.

29. An air mass is a large section of the troposphere with uniform properties of _____ and _____ in the _____.

- temperature, pressure, horizontal.
- pressure, moisture, horizontal.
- temperature, moisture, horizontal.
- temperature, moisture, vertical.

30. A katabatic wind:

- is the term for down slope winds flowing from high elevations down the slopes to valleys below.
- is the term for up slope winds flowing from valleys up the slopes to high elevations above.
- is the term for winds flowing from land to large bodies of water.
- is the term for winds flowing from large bodies of water to land.

31. An anabatic wind:

- is the term for down slope winds flowing from high elevations down the slopes to valleys below.
- is the term for up slope winds flowing from valleys up the slopes to high elevations above.
- is the term for winds flowing from land to large bodies of water.
- is the term for winds flowing from large bodies of water to land.

Unofficial convenience copy of A-CR-CCP-804/PG-001, cached 2026-11-08 from https://app.cadets.gc.ca/cadet-publications/A-CR-CCP-804-PG-001/A-CR-CCP-804-PG-001.pdf.
Verify against the official publication.

32. A gust is:

- a gradual change of wind direction associated with a change in altitude.
- a rapid and irregular change of wind speed.
- a regular and predictable change of wind speed.
- not considered important when learning about meteorology.

33. The three main factors that determine the weather in an air mass are:

- the moisture content, the temperature, and the stability of the air.
- the presence of condensation nuclei, the ambient pressure, and the altitude of the isothermal layer.
- the moisture content, the cooling process, and the altitude of the isothermal layer.
- the moisture content, the cooling process, and the stability of the air.

34. In stable air:

- stratus cloud and poor visibility are common.
- cumulus cloud and good visibility are common.

35. In unstable air:

- stratus cloud and poor visibility are common.
- cumulus cloud and good visibility are common.

36. A _____ air mass is more dense and therefore _____, undercutting a _____ air mass which will _____ over the cold air.

- warm, sinks, cold, ascend.
- cold, sinks, warm, ascend.
- cold, ascends, warm, sink.
- warm, ascends, cold, sink.

37. The shortest distance between two points on the surface of the Earth is represented by:

- a rhumb line.
- true heading.
- magnetic meridian.
- a great circle.

38. The angle between true heading and magnetic heading is:

- variation.
- magnetic dip.
- deviation.
- turning error.

Unofficial convenience copy of A-CR-CCP-804/PG-001, cached 2026-11-08 from https://app.cadets.gc.ca/cadet-publications/A-CR-CCP-804-PG-001/A-CR-CCP-804-PG-001.pdf.
Verify against the official publication.

39. On turns from south, northerly-turning error causes the compass to:
    - lead.
    - indicate correctly.
    - lag.
    - none of the above.

40. Lines drawn on a chart joining places having the same variation are:
    - isobaric lines.
    - isogonic lines.
    - agonic lines.
    - rhumb lines.

41. Meridians of longitude are:
    - measured from 0–90 degrees east and west of the prime meridian.
    - semi-great circles joining the geographic poles of the Earth.
    - measured in hours, minutes, and seconds.
    - all of the above.

42. Parallels of latitude are:
    - circles on the Earth's surface that lie parallel to the equator.
    - measured from 0–90 degrees north and south of the equator.
    - measured in degrees, minutes, and seconds.
    - all of the above.

43. The advantage of a great circle route is:
    - it is the shortest distance between two points on the surface of the Earth.
    - it can be followed at higher altitudes than great circle routes.
    - the direction is constant, allowing a navigator to follow a constant heading.
    - it is the most fuel-efficient route, especially when travelling from east to west.

44. The lubber line is:
    - a painted white line that indicates the direction the airplane is heading.
    - in line with or parallel to the longitudinal axis of the airplane.
    - the location at which the compass card is read.
    - all of the above.

45. What is your heading (in degrees) if you are flying northeast?
    - 45 degrees.
    - 135 degrees.

Unofficial convenience copy of A-CR-CCP-804/PG-001, cached 2026-11-08 from https://app.cadets.gc.ca/cadet-publications/A-CR-CCP-804-PG-001/A-CR-CCP-804-PG-001.pdf.
Verify against the official publication.

- 225 degrees.
- 315 degrees.

Part B–Matching (5 points)

1. Label the following parts on the propeller diagram below.

    - Thrust
    - Relative airflow
    - Resultant
    - Axis of rotation
    - Torque force

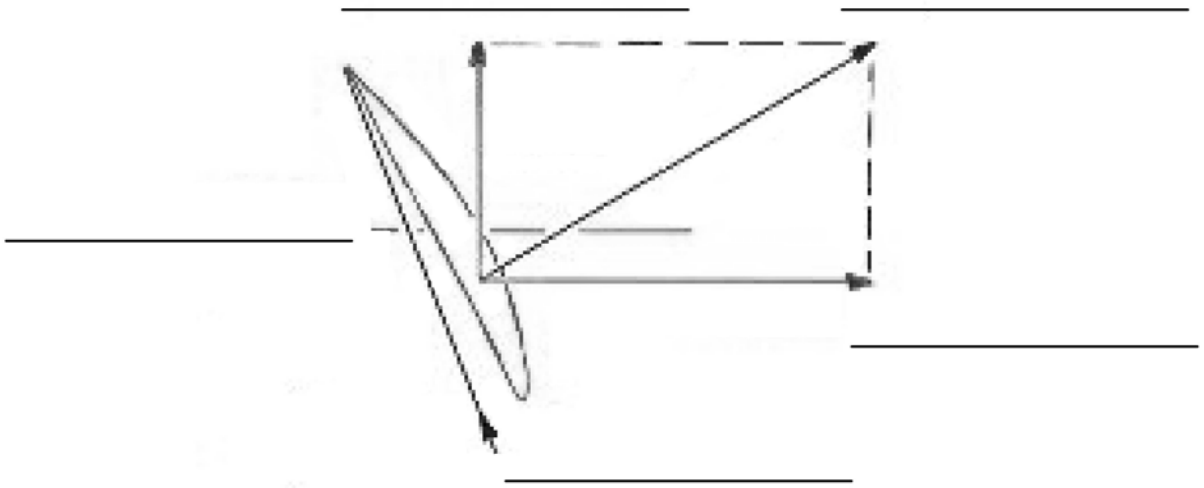

This form shall be reproduced locally.

Unofficial convenience copy of A-CR-CCP-804/PG-001, cached 2026-11-08 from https://app.cadets.gc.ca/cadet-publications/A-CR-CCP-804-PG-001/A-CR-CCP-804-PG-001.pdf.
Verify against the official publication.

AVIATION SUBJECTS–COMBINED ASSESSMENT PC

REWRITE ANSWER KEY

Part A–Multiple Choice (45 points)

1. Laminar airfoils are generally the thickest at _____ percent of the chord.

   - 15.
   - 25.
   - **50.**
   - 65.

2. Laminar flow airfoils reduce drag by maintaining the _____ flow of air throughout a greater percentage of the _____.

   - turbulent, chord.
   - turbulent, span.
   - **laminar, chord.**
   - laminar, span.

3. Aspect ratio is calculated by:

   - **dividing the span by the average chord.**
   - dividing the average chord by the span.
   - dividing the weight by the coefficient of lift.
   - dividing the weight by the coefficient of drag.

4. Increasing the angle of incidence at the wing tip is called:

   - **wash-in.**
   - wash-up.
   - wash-out.
   - wash-off.

5. Which of the following is not a wing-tip modification designed to increase lift / reduce drag?

   - Wing-tip fuel tanks.
   - Winglets.
   - Drooping the wing tips.
   - **Wing fences.**

6. Auxiliary airfoils that move out in front of the leading edge at high angles of attack are called:

   - **slats.**
   - flaps.

Unofficial convenience copy of A-CR-CCP-804/PG-001, cached 2026-11-08 from https://app.cadets.gc.ca/cadet-publications/A-CR-CCP-804-PG-001/A-CR-CCP-804-PG-001.pdf.
Verify against the official publication.

- wing fences.
- slots.

7. Passages built into the wing that affect the airflow in the same way as slats are called:
   - slats.
   - flaps.
   - wing fences.
   - **slots.**

8. In addition to creating lift, flaps also create:
   - thrust.
   - weight.
   - trim.
   - **drag.**

9. The curvature of an airfoil is also called:
   - chord.
   - span.
   - rib.
   - **camber.**

10. Pitot pressure is the atmospheric pressure outside the aircraft, not affected by turbulence or motion.
    - True.
    - **False.**

11. The ASI is connected to both the pitot pressure source and the static pressure port.
    - **True.**
    - False.

12. Density errors in the ASI are caused by:
    - an increase in the temperature of the air as the density increases.
    - a decrease in the temperature of the air as the altitude decreases.
    - blockages of the pitot static system due to the density of the air.
    - **a decrease in the density of the air as the altitude increases.**

13. The IAS corrected for instrument and position errors is the:
    - **CAS.**
    - IAS.
    - TAS.
    - EAS.

Unofficial convenience copy of A-CR-CCP-804/PG-001, cached 2026-11-08 from https://app.cadets.gc.ca/cadet-publications/A-CR-CCP-804-PG-001/A-CR-CCP-804-PG-001.pdf.
Verify against the official publication.

14. When flying into an area with a relatively higher pressure, if the altimeter setting is not corrected, the altimeter will read:

- **lower than the actual altitude.**
- higher than the actual altitude.
- the correct altitude, provided that the pilot maintains a constant airspeed.
- the correct altitude, provided that the pilot maintains a constant angle of bank.

15. Density altitude is:

- the altitude displayed on the altimeter when it is set to 29.92 inches of mercury.
- the actual height above Earth's surface.
- **the pressure altitude corrected for temperature.**
- the pressure altitude corrected for absolute errors.

16. The VSI measures the rate of change of the pitot pressure and indicates if the altitude is increasing or decreasing.

- True.
- **False.**

17. Gyroscopic inertia is also known as:

- precession.
- **rigidity in space.**
- fluidity in space.
- rotation.

18. Precession is:

- **the tendency of a rotating body, when a force is applied perpendicular to its plane of rotation, to turn in the direction of its rotation 90 degrees to its axis and take up a new plane of rotation parallel to the force applied.**
- the tendency of a rotating object to remain in its plane of rotation.
- the tendency of a rotating body, when a force is applied parallel to its plane of rotation, to turn in the direction of its rotation 90 degrees to its axis and take up a new plane of rotation perpendicular to the force applied.
- the tendency of a rotating object to move from its plane of rotation.

19. Where should the fuel tank be positioned in a gravity feed system?

- **Above the carburetor.**
- Below the carburetor.
- In-line with the carburetor.
- Below the centre of gravity.

Unofficial convenience copy of A-CR-CCP-804/PG-001, cached 2026-11-08 from https://app.cadets.gc.ca/cadet-publications/A-CR-CCP-804-PG-001/A-CR-CCP-804-PG-001.pdf.
Verify against the official publication.

20. What does the fuel selector valve, used by the pilot, do?

- Transfer fuel.
- Select desired fuel tank to draw fuel.
- Shut off the flow of fuel from the tanks.
- **Both B and C.**

21. Forward movement of the throttle opens the throttle valve, which increases the fuel / air mixture, and increases the power being produced by the engine.

- **True.**
- False.

22. Which two gauges measure the properties of the engine oil?

- Oil pressure and cylinder head temperature gauges.
- Oil temperature and outside air temperature gauges.
- **Oil pressure and oil temperature gauges.**
- Oil temperature and oil viscosity gauges.

23. What is maintained throughout most of the diameter of the propeller by means of the variation in airfoil sections and the angle of attack?

- Pitch.
- Drag.
- **Thrust.**
- Dihedral.

24. What is the distance a propeller travels forward in one revolution?

- **Pitch.**
- Drag.
- Thrust.
- Dihedral.

25. What colour-coded arcs are found on the tachometer?

- Green, orange, red.
- Blue, red, green.
- **Green, yellow, red.**
- Black, white, red.

26. What reading will register on the manifold pressure gauge when the engine is not running?

- Engine power.
- **Atmospheric pressure.**

Unofficial convenience copy of A-CR-CCP-804/PG-001, cached 2026-11-08 from https://app.cadets.gc.ca/cadet-publications/A-CR-CCP-804-PG-001/A-CR-CCP-804-PG-001.pdf.
Verify against the official publication.

- Air temperature.
- Compression pressure.

27. What occurs to an engine as the altitude increases and the air becomes less dense?

- Power increases.
- Power remains stable.
- **Power decreases.**
- Engine stops.

28. What effect does surface friction have on winds?

- None.
- It causes winds to back and veer.
- It causes an increase in wind speeds.
- **It causes lower wind speeds than would be expected from the pressure gradient.**

29. An air mass is a large section of the troposphere with uniform properties of _____ and _____ in the _____.

- temperature, pressure, horizontal.
- pressure, moisture, horizontal.
- **temperature, moisture, horizontal.**
- temperature, moisture, vertical.

30. A katabatic wind:

- **is the term for down slope winds flowing from high elevations down the slopes to valleys below.**
- is the term for up slope winds flowing from valleys up the slopes to high elevations above.
- is the term for winds flowing from land to large bodies of water.
- is the term for winds flowing from large bodies of water to land.

31. An anabatic wind:

- is the term for down slope winds flowing from high elevations down the slopes to valleys below.
- **is the term for up slope winds flowing from valleys up the slopes to high elevations above.**
- is the term for winds flowing from land to large bodies of water.
- is the term for winds flowing from large bodies of water to land.

32. A gust is:

- a gradual change of wind direction associated with a change in altitude.
- **a rapid and irregular change of wind speed.**
- a regular and predictable change of wind speed.
- not considered important when learning about meteorology.

Unofficial convenience copy of A-CR-CCP-804/PG-001, cached 2026-11-08 from https://app.cadets.gc.ca/cadet-publications/A-CR-CCP-804-PG-001/A-CR-CCP-804-PG-001.pdf.
Verify against the official publication.

33. The three main factors that determine the weather in an air mass are:

- the moisture content, the temperature, and the stability of the air.
- the presence of condensation nuclei, the ambient pressure, and the altitude of the isothermal layer.
- the moisture content, the cooling process, and the altitude of the isothermal layer.
- **the moisture content, the cooling process, and the stability of the air.**

34. In stable air:

- **stratus cloud and poor visibility are common.**
- cumulus cloud and good visibility are common.

35. In unstable air:

- stratus cloud and poor visibility are common.
- **cumulus cloud and good visibility are common.**

36. A _____ air mass is more dense and therefore _____, undercutting a _____ air mass which will _____ over the cold air.

- warm, sinks, cold, ascend.
- **cold, sinks, warm, ascend.**
- cold, ascends, warm, sink.
- warm, ascends, cold, sink.

37. The shortest distance between two points on the surface of the Earth is represented by:

- a rhumb line.
- true heading.
- magnetic meridian.
- **a great circle.**

38. The angle between true heading and magnetic heading is:

- **variation.**
- magnetic dip.
- deviation.
- turning error.

39. On turns from south, northerly-turning error causes the compass to:

- **lead.**
- indicate correctly.
- lag.
- none of the above.

Unofficial convenience copy of A-CR-CCP-804/PG-001, cached 2026-11-08 from https://app.cadets.gc.ca/cadet-publications/A-CR-CCP-804-PG-001/A-CR-CCP-804-PG-001.pdf.
Verify against the official publication.

40. Lines drawn on a chart joining places having the same variation are:
    - isobaric lines.
    - **isogonic lines.**
    - agonic lines.
    - rhumb lines.

41. Meridians of longitude are:
    - measured from 0–90 degrees east and west of the prime meridian.
    - **semi-great circles joining the geographic poles of the Earth.**
    - measured in hours, minutes, and seconds.
    - all of the above.

42. Parallels of latitude are:
    - circles on the Earth's surface that lie parallel to the equator.
    - measured from 0–90 degrees north and south of the equator.
    - measured in degrees, minutes, and seconds.
    - **all of the above.**

43. The advantage of a great circle route is:
    - **it is the shortest distance between two points on the surface of the Earth.**
    - it can be followed at higher altitudes than great circle routes.
    - the direction is constant, allowing a navigator to follow a constant heading.
    - it is the most fuel-efficient route, especially when travelling from east to west.

44. The lubber line is:
    - a painted white line that indicates the direction the airplane is heading.
    - in line with or parallel to the longitudinal axis of the airplane.
    - the location at which the compass card is read.
    - **all of the above.**

45. What is your heading (in degrees) if you are flying northeast?
    - **45 degrees.**
    - 135 degrees.
    - 225 degrees.
    - 315 degrees.

Unofficial convenience copy of A-CR-CCP-804/PG-001, cached 2026-11-08 from https://app.cadets.gc.ca/cadet-publications/A-CR-CCP-804-PG-001/A-CR-CCP-804-PG-001.pdf.
Verify against the official publication.

Part B–Matching (5 points)

1. Label the following parts on the propeller diagram below.

   - Thrust
   - Relative airflow
   - Resultant
   - Axis of rotation
   - Torque force

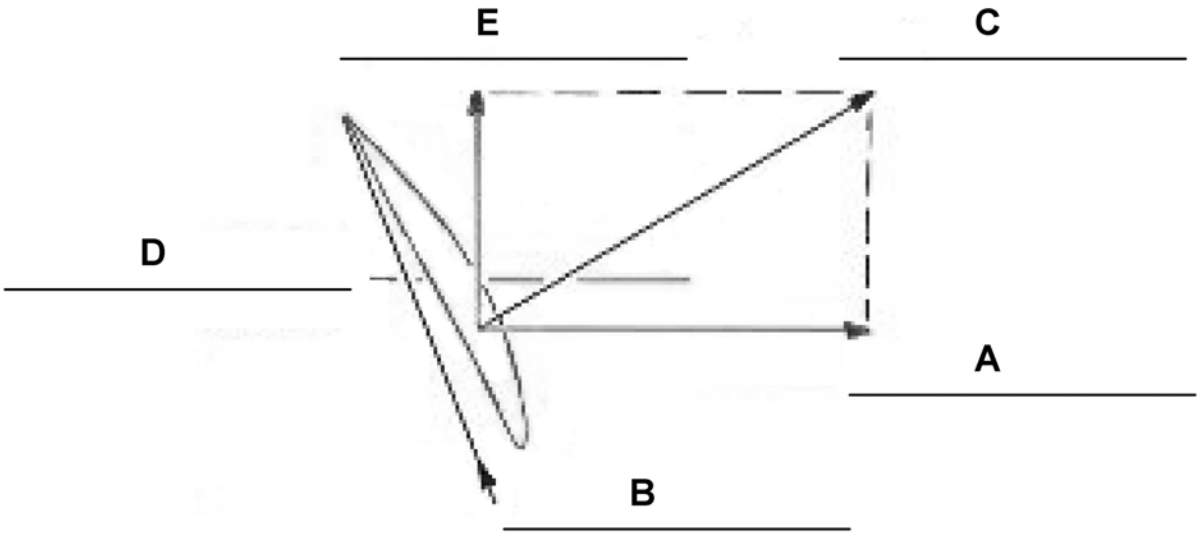

Unofficial convenience copy of A-CR-CCP-804/PG-001, cached 2026-11-08 from https://app.cadets.gc.ca/cadet-publications/A-CR-CCP-804-PG-001/A-CR-CCP-804-PG-001.pdf.
Verify against the official publication.

ANNEX B, APPENDIX 7

490 PC

ASSESSMENT INSTRUCTIONS

PREPARATION

PRE-ASSESSMENT INSTRUCTIONS

Review the assessment plan, assessment instructions and 490 PC Assessment Rubric and become familiar with the material prior to conducting the assessment.

There is no time allotted for 490 PC; it is to be administered during an aircrew survival exercise.

If the cadet does not achieve the performance standard, the cadet will be given additional opportunities for the 490 PC so the performance will be met.

Photocopy the 490 PC Assessment Rubric twice for each cadet.

PRE-ASSESSMENT ASSIGNMENT

The cadet shall review the 490 PC Assessment Rubric and become familiar with the assessment criteria prior to the assessment.

ASSESSMENT METHOD

Performance assessment and personal communication were chosen so the assessor may observe the cadet's ability to perform the required skill(s) and make a judgement on the quality of performance.

CONDUCT OF ASSESSMENT

PURPOSE

The purpose of this PC is to assess the cadet's ability to participate in an aircrew survival exercise.

RESOURCES

- Two 490 PC Assessment Rubrics for each cadet,
- Two-burner naphtha stove,
- Dual-mantle naphtha lantern,
- Lantern storage carrier,
- Mantles,
- Naphtha,
- Fire extinguisher,
- Funnel,
- Drip pan,
- Matches,
- Needle-nose pliers,
- Spill response kit,

Unofficial convenience copy of A-CR-CCP-804/PG-001, cached 2026-11-08 from https://app.cadets.gc.ca/cadet-publications/A-CR-CCP-804-PG-001/A-CR-CCP-804-PG-001.pdf.
Verify against the official publication.

- Braided rope,
- Poles,
- GPS receiver with charged batteries,
- Hand-held radio with charged batteries,
- Waypoint form,
- Pen / pencil
- Aluminium can,
- Battery,
- Chocolate,
- Cordage,
- Knife,
- Magnesium fire starter,
- Magnifying glass, and
- Steel wool.

ASSESSMENT ACTIVITY LAYOUT

As per the aircrew survival exercise site.

ASSESSMENT ACTIVITY INSTRUCTIONS



While observing the cadet participating in an aircrew survival exercise, assess the quality of each criterion by indicating (eg, highlighting, circling, note taking) on the Assessment Rubric, the descriptive statement that best represents this judgment. Criteria for the 490 PC are assessed as:

- **Incomplete;**
- **Completed with difficulty;**
- **Completed without difficulty; or**
- **Exceeded standard**.

Make notes of observations to provide descriptive post-assessment feedback.

1. Have the cadet participate in each EO for PO 490.

2. Evaluate the cadet's skills by observation after each cadet takes part in each EO for PO 490. Record the result (eg, highlighting, circling, note taking) on the Assessment Rubric for each criterion.

3. Distribute the Assessment Rubric to the cadet for self-assessment purposes.

4. Tell the cadet their self-assessment will not be recorded on their qualification record.

5. Have the cadet assess their performance on their Assessment Rubric.

Unofficial convenience copy of A-CR-CCP-804/PG-001, cached 2026-11-08 from https://app.cadets.gc.ca/cadet-publications/A-CR-CCP-804-PG-001/A-CR-CCP-804-PG-001.pdf.
Verify against the official publication.

POST ASSESSMENT INSTRUCTIONS

RECORDING ASSESSMENT RESULTS

1. Indicate the overall performance assessment on the Assessment Checklist as:
   a. **Incomplete.** Overall, the cadet has not achieved the performance standard;
   b. **Completed with difficulty.** Overall, the cadet has achieved the performance standard with difficulty;
   c. **Completed without difficulty.** Overall, the cadet has achieved the performance standard without difficulty; or
   d. **Exceeded standard.** Overall, the cadet has exceeded the performance standard.
2. Record notes and observations in the assessor’s feedback section of the Assessment Checklist.
3. Sign and date the Assessment Checklist.
4. Ensure a copy of the Assessment Checklist is attached to the cadet's training file.
5. The overall result will be recorded on the Proficiency Level Four Qualification Record located at Chapter 3, Annex C.

PROVIDING ASSESSMENT FEEDBACK

Discuss the cadet's self-assessment on their performance.

Ask the cadet what they felt went right during the survival exercise, what did not go well and ask the cadet how they would improve their performance if the survival exercise was conducted again.

Discuss the performance results of each section of the Assessment Rubric with the cadet.

Discuss the overall performance results with the cadet and provide the cadet with a copy of the completed rubric

Unofficial convenience copy of A-CR-CCP-804/PG-001, cached 2026-11-08 from https://app.cadets.gc.ca/cadet-publications/A-CR-CCP-804-PG-001/A-CR-CCP-804-PG-001.pdf.
Verify against the official publication.

490 PC ASSESSMENT RUBRIC

Cadet's Name: _____ Squadron: _____

Date: _____ Flight: _____

	Incomplete	Completed With Difficulty	Completed Without Difficulty	Exceeded the Standard
Operated a stove and lantern.	Did not fill, pressurize, light, extinguish, drain, clean or perform minor maintenance on a stove and lantern.	Filled, pressurized, lit and extinguished a stove or lantern with assistance.	Filled, pressurized, lit, extinguished drained and cleaned a stove or lantern with minimal assistance.	Filled, pressurized, lit, extinguished, drained, cleaned and performed minor maintenance on a stove and lantern without assistance.
Tied knots and lashings.	Did not tie knots and lashings.	Tied a reef knot and a figure-of-eight knot and a round lashing.	Tied a reef knot, a figure-of-eight knot, a clove hitch, a round lashing and a square lashing.	Tied a reef knot, a figure-of-eight knot, a clove hitch and bowline and round lashing, a square lashing and a figure-of-eight lashing.
Navigating to a waypoint using a GPS.	Did not navigate to a waypoint.	Navigated to a few waypoints.	Navigated to most waypoints.	Navigated to all waypoints.
Lit Fires using improvised ignition.	Did not light fires using improvised ignitions.	Lit one fire using improvised ignition.	Lit more than one fire using improvised ignition.	Lit all fires using improvised ignition.

This form shall be reproduced locally.

Unofficial convenience copy of A-CR-CCP-804/PG-001, cached 2026-11-08 from https://app.cadets.gc.ca/cadet-publications/A-CR-CCP-804-PG-001/A-CR-CCP-804-PG-001.pdf.
Verify against the official publication.

Assessor's Feedback:

	PO 490 Overall Assessment							
Check One	**Incomplete**		**Completed With Difficulty**		**Completed Without Difficulty**		**Exceeded Standard**	
Overall Performance	The cadet has not achieved the performance standard.		The cadet has achieved the performance standard with difficulty.		The cadet has achieved the performance standard without difficulty.		The cadet has exceeded the performance standard.	

Assessor's Name:	**Position:**
Assessor's Signature:	**Date:**

This form shall be reproduced locally.

Unofficial convenience copy of A-CR-CCP-804/PG-001, cached 2026-11-08 from https://app.cadets.gc.ca/cadet-publications/A-CR-CCP-804-PG-001/A-CR-CCP-804-PG-001.pdf.
Verify against the official publication.

THIS PAGE INTENTIONALLY LEFT BLANK

Unofficial convenience copy of A-CR-CCP-804/PG-001, cached 2026-11-08 from https://app.cadets.gc.ca/cadet-publications/A-CR-CCP-804-PG-001/A-CR-CCP-804-PG-001.pdf.
Verify against the official publication.