OUTILS ET PIÈCES DE FIXATION UTILISÉS SUR LES AÉRONEFS

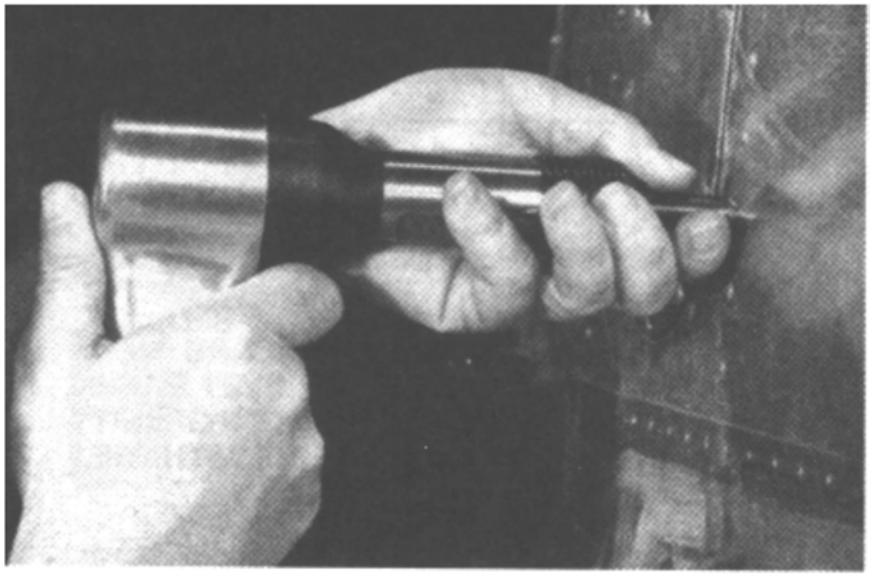

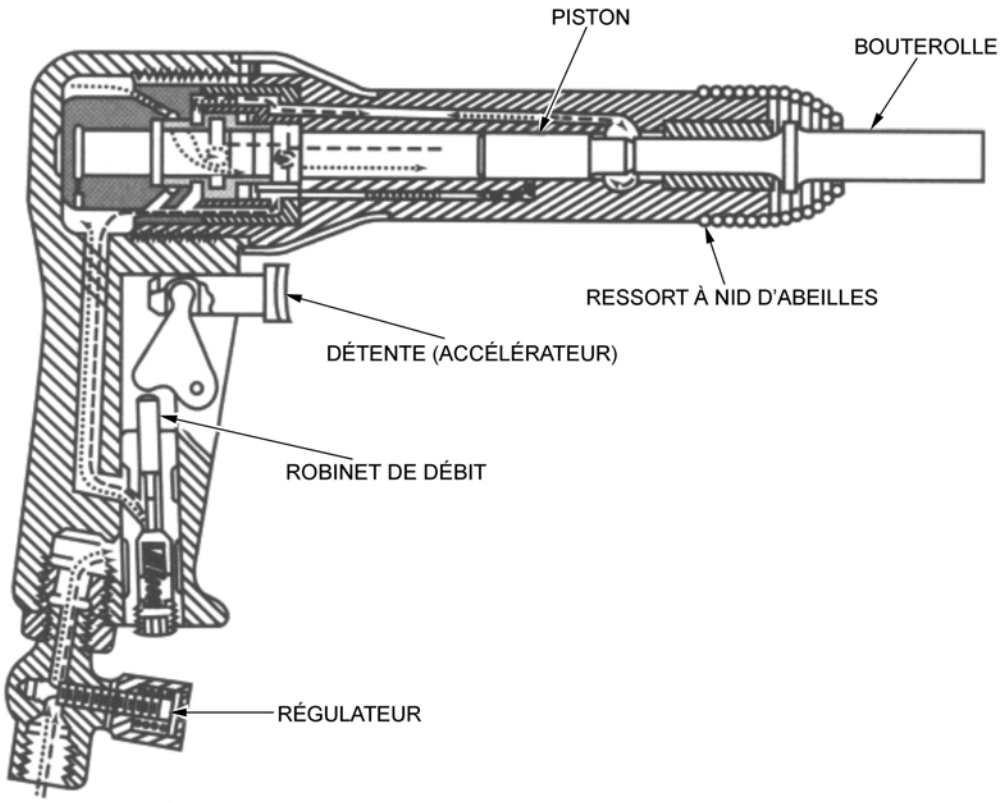

Sanderson Training Systems, A&P Technician Airframe Textbook, Jeppesen Sanderson Inc. (pages 2-63 à 2-66)

Figure S-1 Pistolet à riveter

Unofficial convenience copy of A-CR-CCP-803/PF-002, cached 2026-11-08 from https://app.cadets.gc.ca/cadet-publications/A-CR-CCP-803-PF-002/A-CR-CCP-803-PF-002.pdf.
Verify against the official publication.

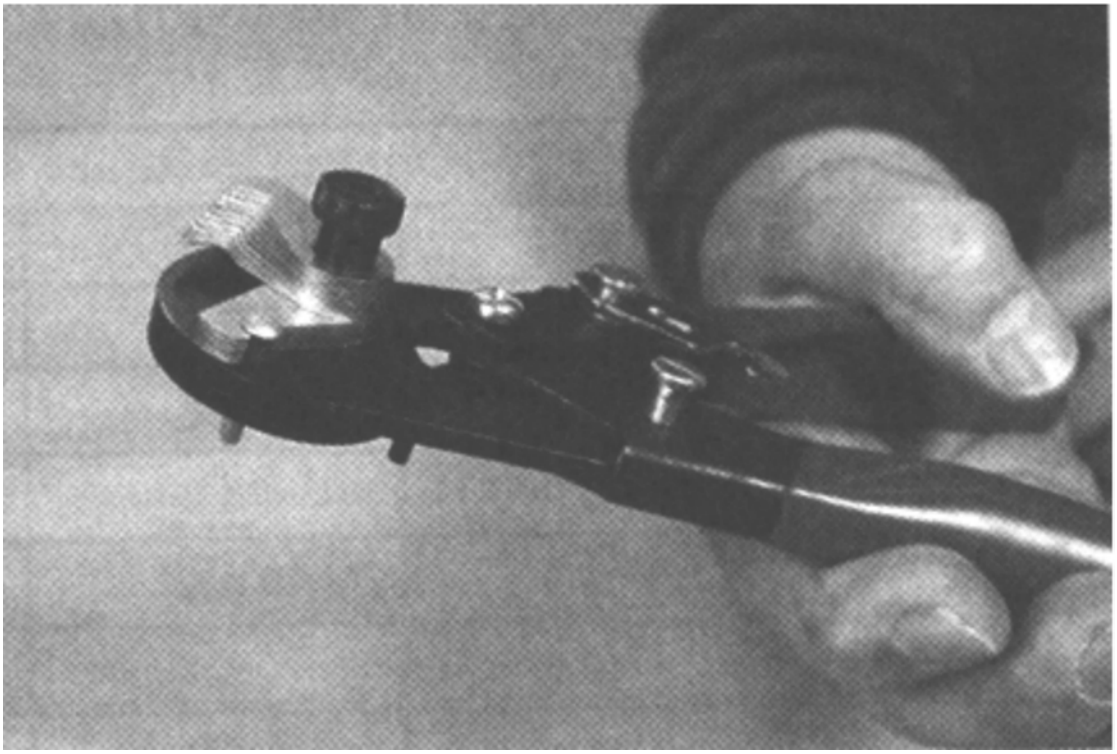

Sanderson Training Systems, A&P Technician Airframe Textbook, Jeppesen Sanderson Inc. (page 2-53)

Figure S-2 Cisaille à rivets

Unofficial convenience copy of A-CR-CCP-803/PF-002, cached 2026-11-08 from https://app.cadets.gc.ca/cadet-publications/A-CR-CCP-803-PF-002/A-CR-CCP-803-PF-002.pdf.
Verify against the official publication.

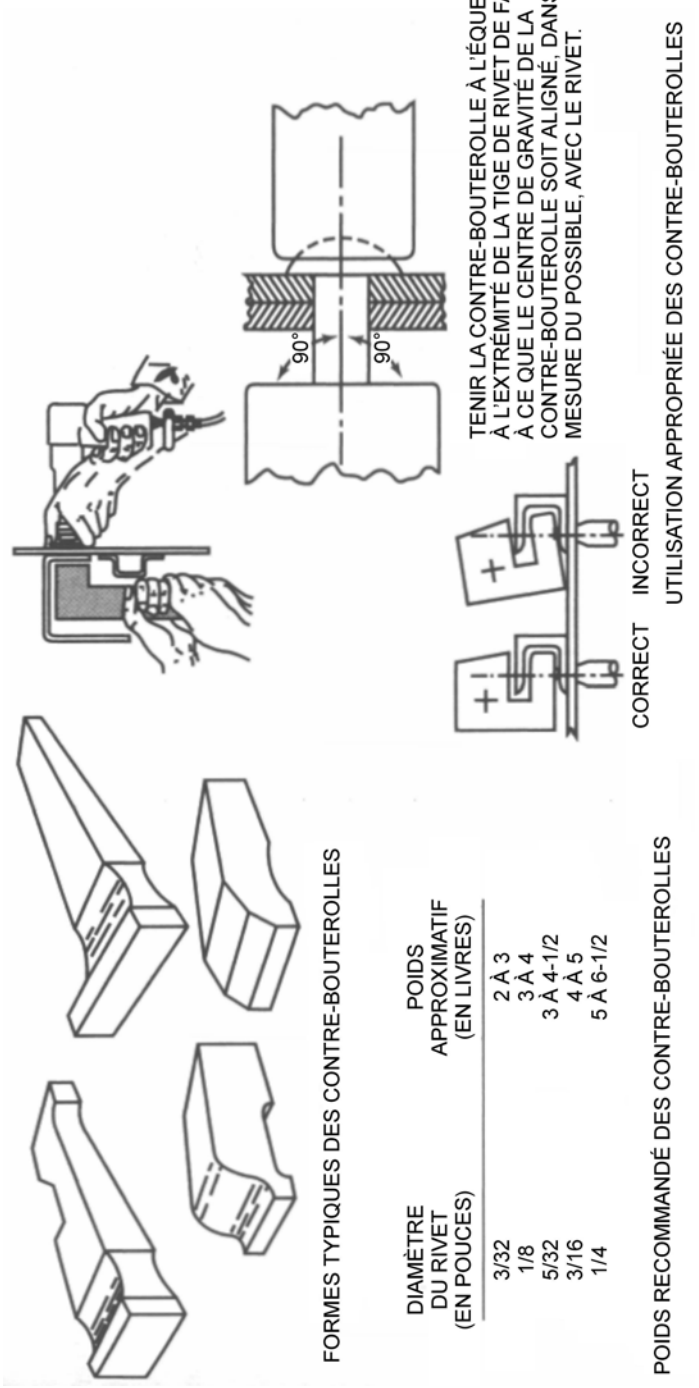

DIAMÈTRE DU RIVET (EN POUCES)	POIDS APPROXIMATIF (EN LIVRES)
3/32	2 À 3
1/8	3 À 4
5/32	3 À 4-1/2
3/16	4 À 5
1/4	5 À 6-1/2

Sanderson Training Systems, A&P Technician Airframe Textbook, Jeppesen Sanderson Inc. (page 2-65)

Figure S-3 Contre-bouterolles

Unofficial convenience copy of A-CR-CCP-803/PF-002, cached 2026-11-08 from https://app.cadets.gc.ca/cadet-publications/A-CR-CCP-803-PF-002/A-CR-CCP-803-PF-002.pdf.
Verify against the official publication.

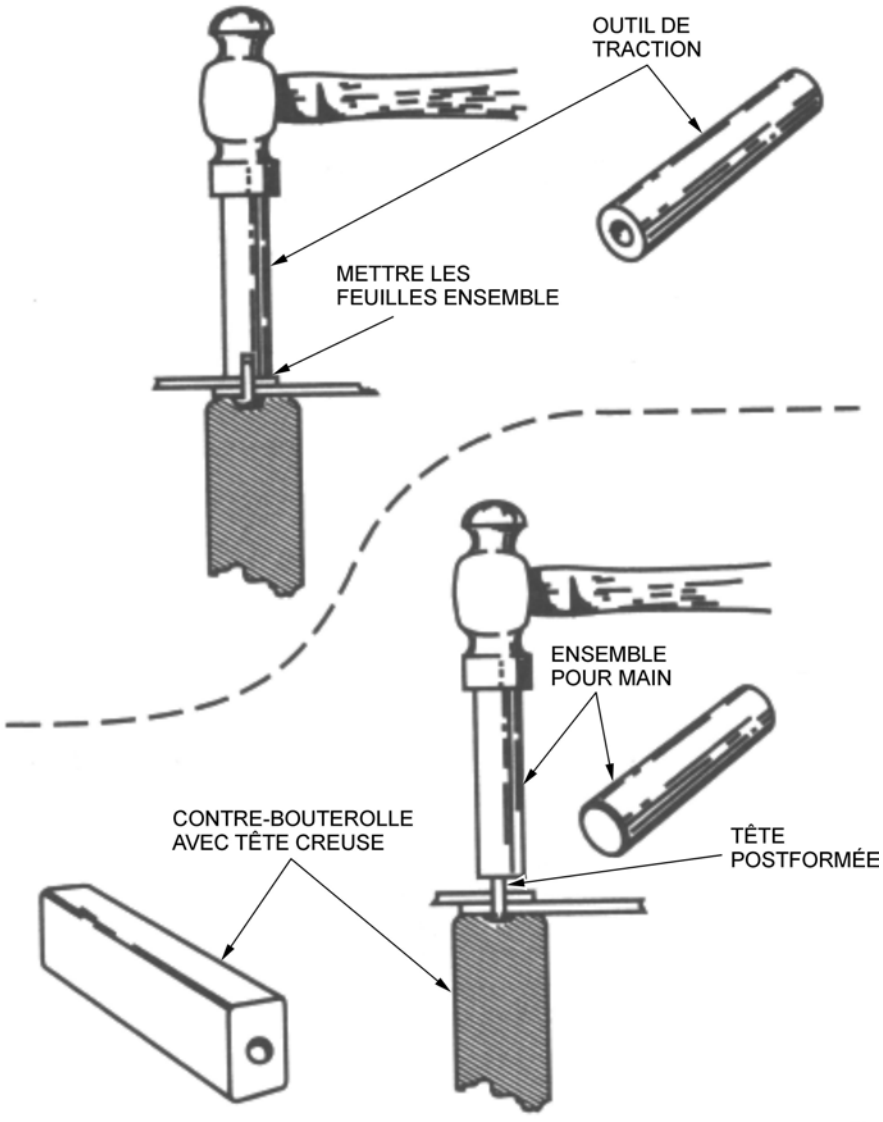

Sanderson Training Systems, A&P Technician Airframe Textbook, Jeppesen Sanderson Inc. (page 2-61)

Figure S-4 Rivetage à main

Unofficial convenience copy of A-CR-CCP-803/PF-002, cached 2026-11-08 from https://app.cadets.gc.ca/cadet-publications/A-CR-CCP-803-PF-002/A-CR-CCP-803-PF-002.pdf.
Verify against the official publication.

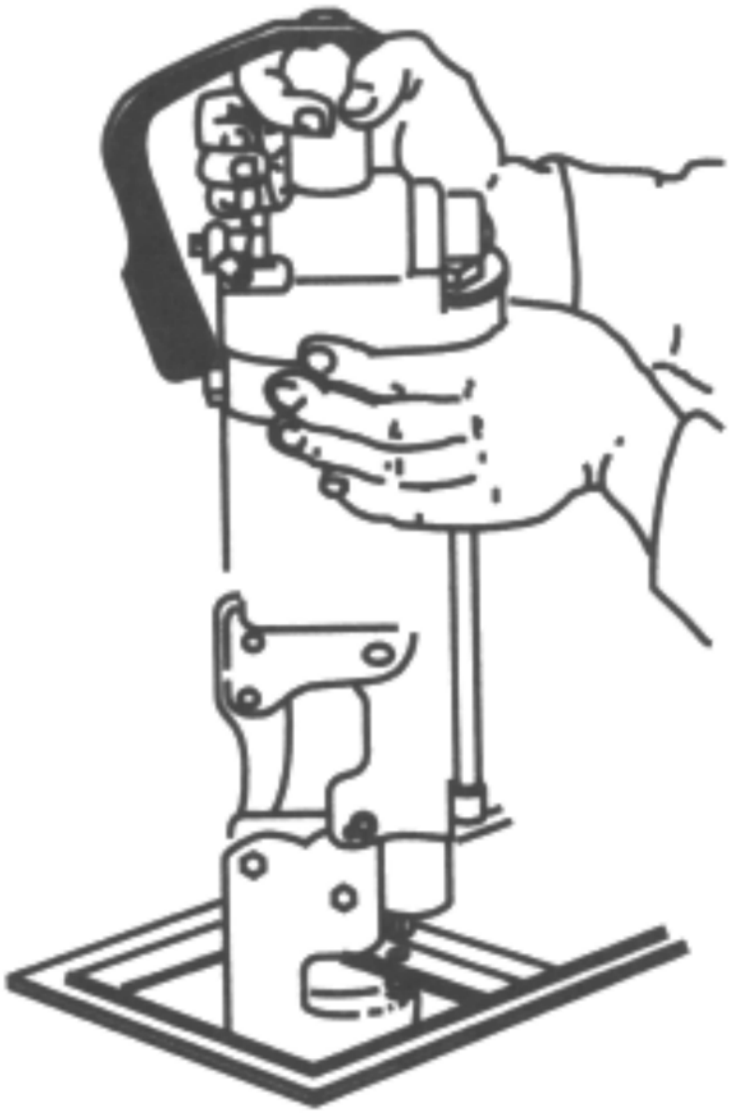

Sanderson Training Systems, A&P Technician Airframe Textbook, Jeppesen Sanderson Inc. (page 2-61)

Figure S-5 Riveteuse par pression

Unofficial convenience copy of A-CR-CCP-803/PF-002, cached 2026-11-08 from https://app.cadets.gc.ca/cadet-publications/A-CR-CCP-803-PF-002/A-CR-CCP-803-PF-002.pdf.
Verify against the official publication.

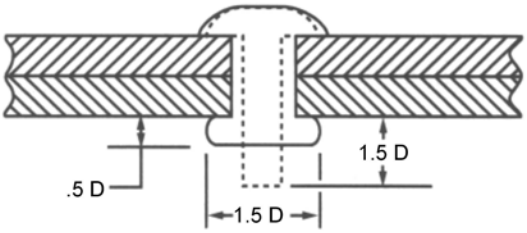

LORSQUE LE RIVET ENFONCÉ SE GONFLE POUR ATTEINDRE LE DIAMÈTRE DU TROU PERCÉ.

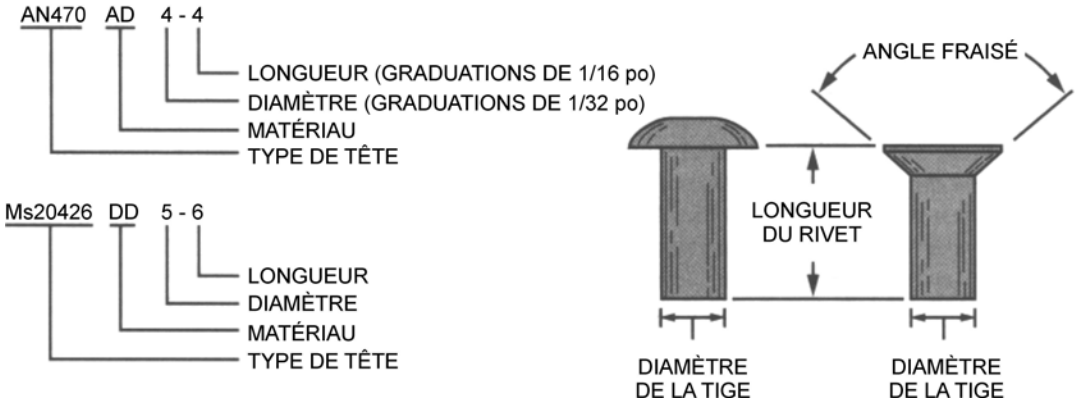

Sanderson Training Systems, A&P Technician Airframe Textbook, Jeppesen Sanderson Inc. (page 2-36)

Figure S-6 Applications, dimensions et désignations d'un rivet

Unofficial convenience copy of A-CR-CCP-803/PF-002, cached 2026-11-08 from https://app.cadets.gc.ca/cadet-publications/A-CR-CCP-803-PF-002/A-CR-CCP-803-PF-002.pdf.
Verify against the official publication.