L'ÉQUIPEMENT D'ATELIER UTILISÉ SUR LES AÉRONEFS

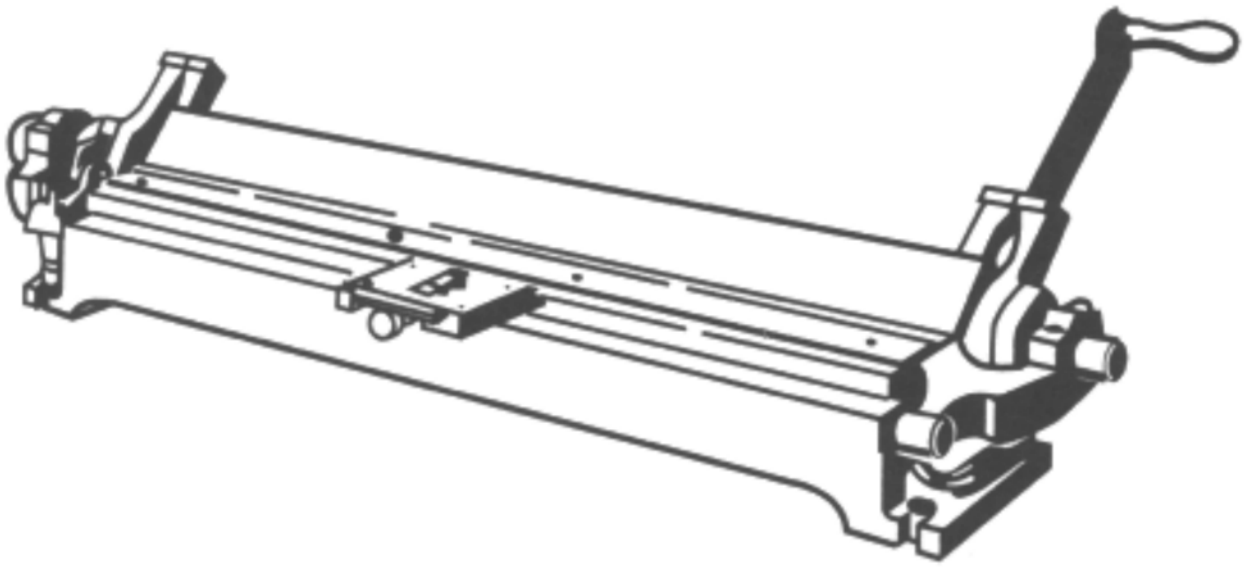

Sanderson Training Systems, A&P Technician Airframe Textbook, Jeppesen Sanderson Inc. (page 2-30)

Figure R-1 Plieuse

Unofficial convenience copy of A-CR-CCP-803/PF-002, cached 2026-11-08 from https://app.cadets.gc.ca/cadet-publications/A-CR-CCP-803-PF-002/A-CR-CCP-803-PF-002.pdf.
Verify against the official publication.

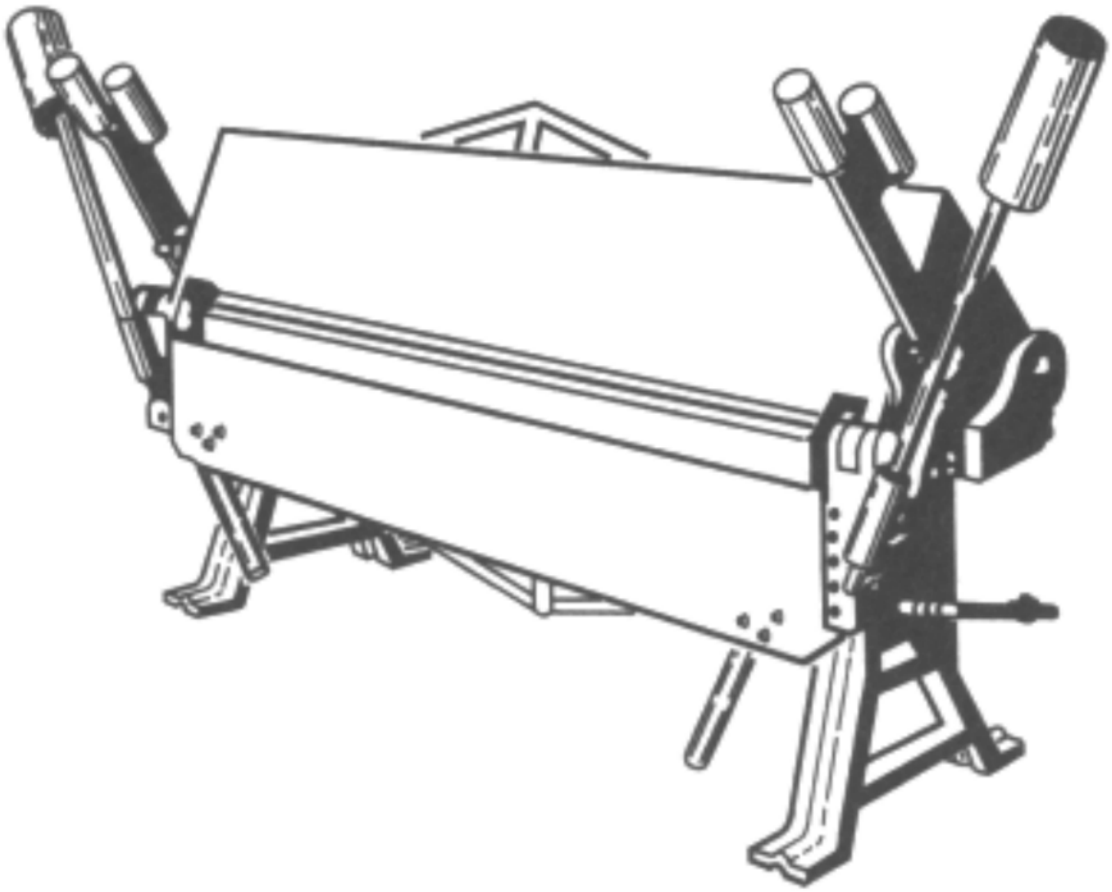

Sanderson Training Systems, A&P Technician Airframe Textbook, Jeppesen Sanderson Inc. (page 2-29)

Figure R-2 Machine à cintrer

Unofficial convenience copy of A-CR-CCP-803/PF-002, cached 2026-11-08 from https://app.cadets.gc.ca/cadet-publications/A-CR-CCP-803-PF-002/A-CR-CCP-803-PF-002.pdf.
Verify against the official publication.

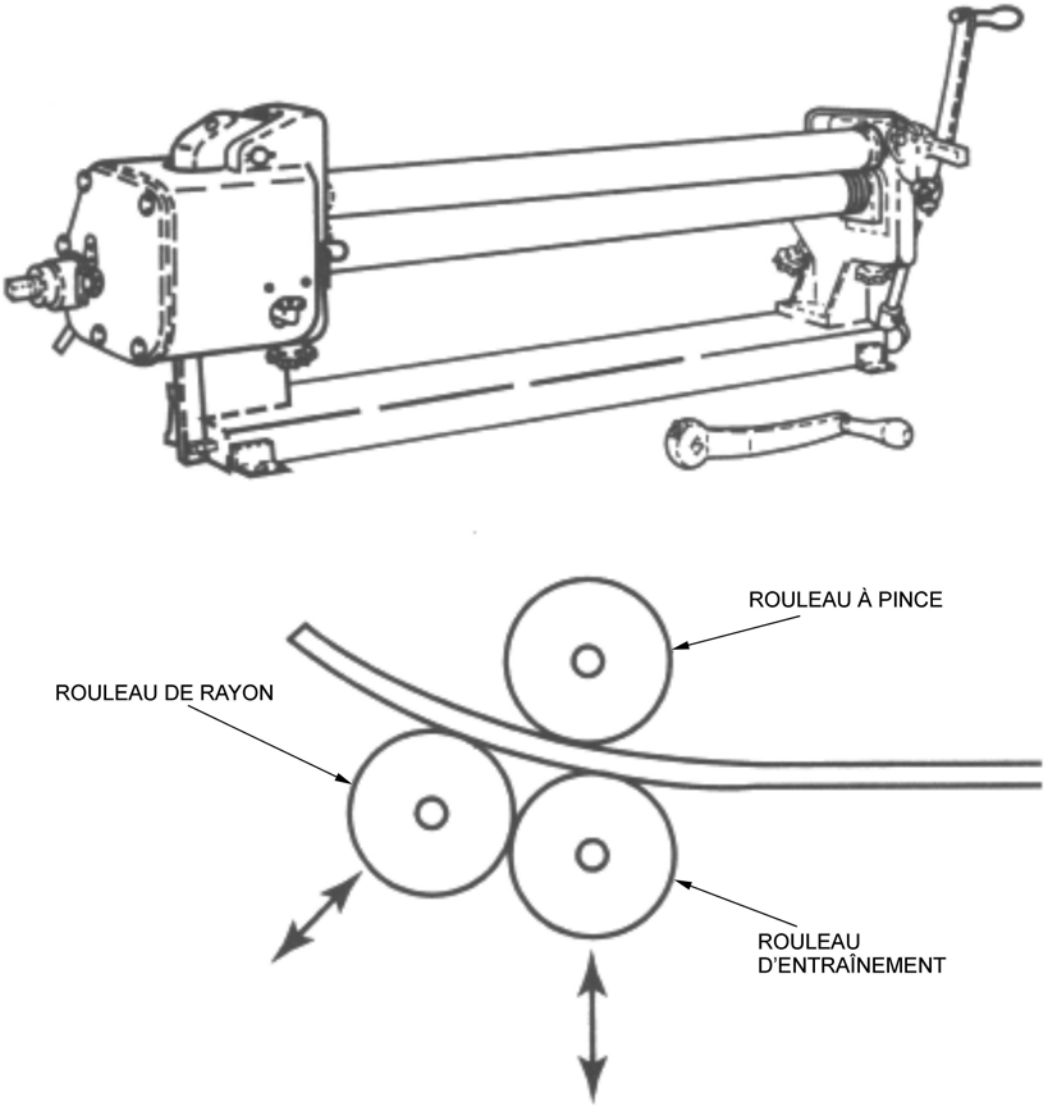

Sanderson Training Systems, A&P Technician Airframe Textbook, Jeppesen Sanderson Inc. (page 2-31)

Figure R-3 Cintreuse à glissement

Unofficial convenience copy of A-CR-CCP-803/PF-002, cached 2026-11-08 from https://app.cadets.gc.ca/cadet-publications/A-CR-CCP-803-PF-002/A-CR-CCP-803-PF-002.pdf.
Verify against the official publication.



Triway YangZhong International Trade Company, Hydropress. Extrait le 17 novembre 2007 du site http://www.nantex-triway.com/equipment.htm

Figure R-4 Machine hydroforme

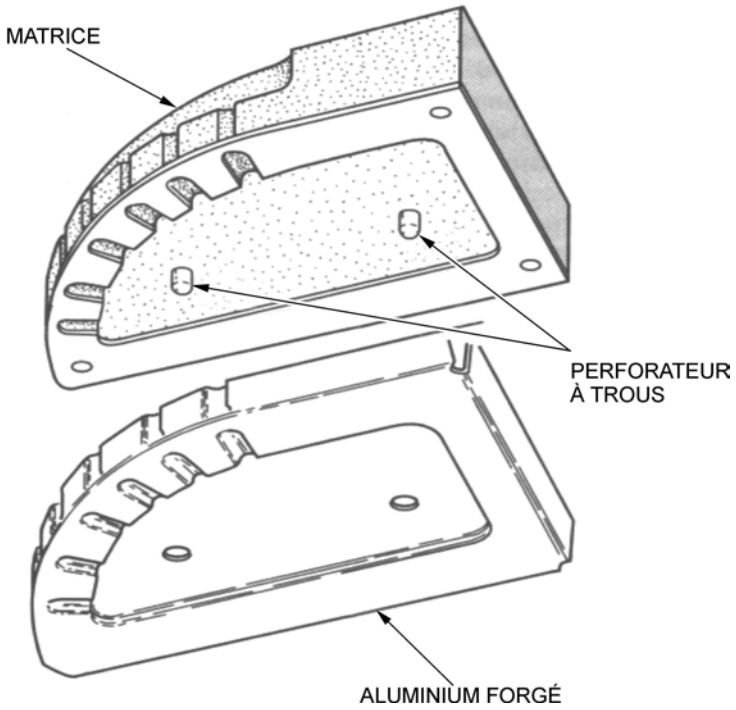

Sanderson Training Systems, A&P Technician Airframe Textbook, Jeppesen Sanderson Inc. (page 2-32)

Figure R-5 Matrice de machine hydroforme avec produit en aluminium forgé

Unofficial convenience copy of A-CR-CCP-803/PF-002, cached 2026-11-08 from https://app.cadets.gc.ca/cadet-publications/A-CR-CCP-803-PF-002/A-CR-CCP-803-PF-002.pdf.
Verify against the official publication.

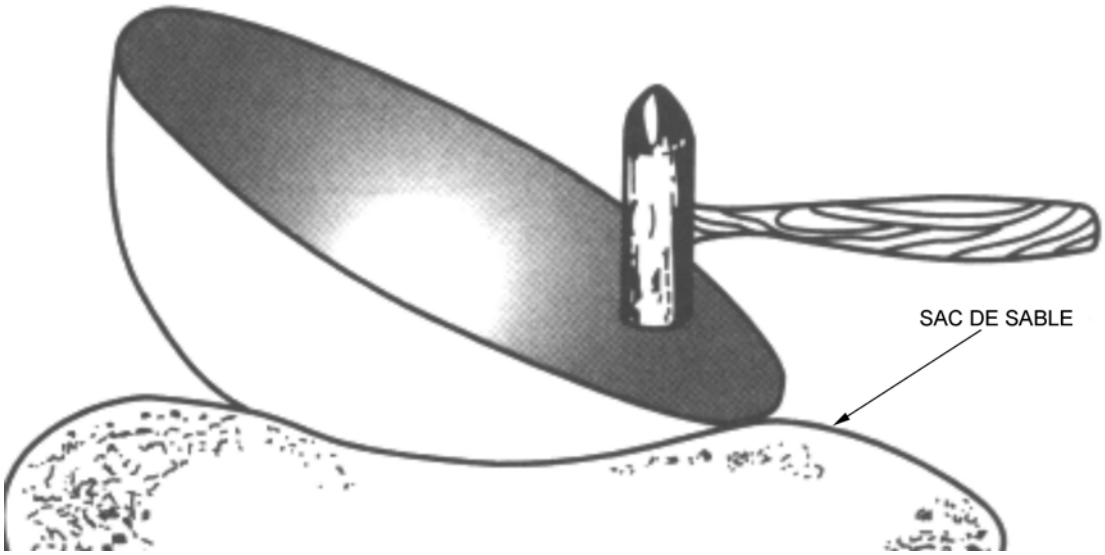

Sanderson Training Systems, A&P Technician Airframe Textbook, Jeppesen Sanderson Inc. (page 2-32)

Figure R-6 Modelage en sac de sable

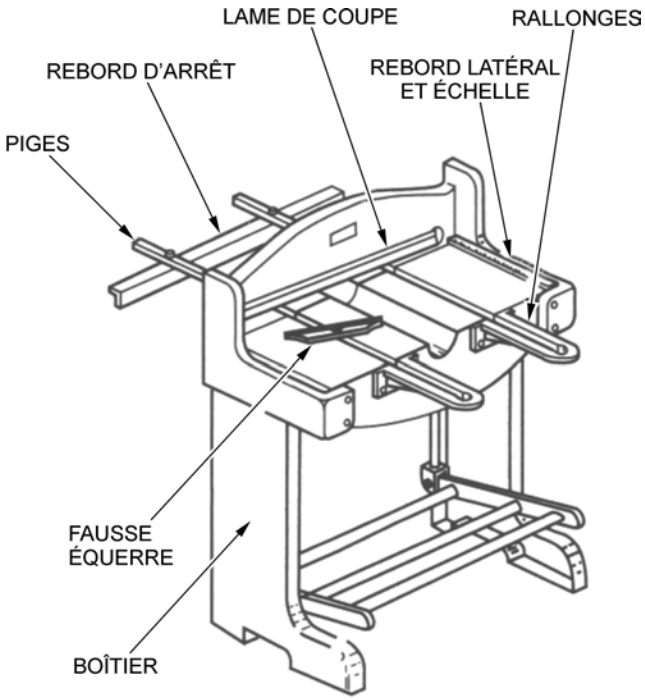

Sanderson Training Systems, A&P Technician Airframe Textbook, Jeppesen Sanderson Inc. (page 2-22)

Figure R-7 Cisaille à guillotine

Unofficial convenience copy of A-CR-CCP-803/PF-002, cached 2026-11-08 from https://app.cadets.gc.ca/cadet-publications/A-CR-CCP-803-PF-002/A-CR-CCP-803-PF-002.pdf.
Verify against the official publication.

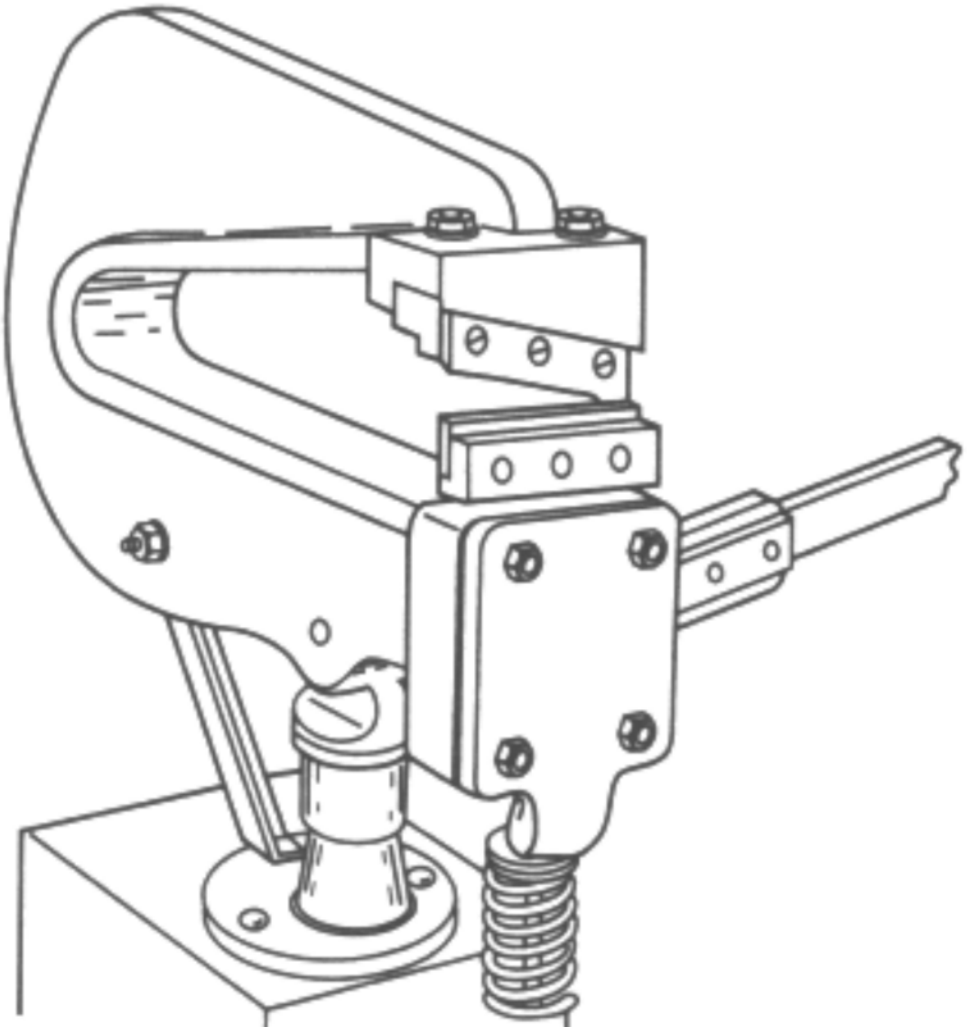

Sanderson Training Systems, A&P Technician Airframe Textbook, Jeppesen Sanderson Inc. (page 2-24)

Figure R-8 Cisaille à détourer

Unofficial convenience copy of A-CR-CCP-803/PF-002, cached 2026-11-08 from https://app.cadets.gc.ca/cadet-publications/A-CR-CCP-803-PF-002/A-CR-CCP-803-PF-002.pdf.
Verify against the official publication.

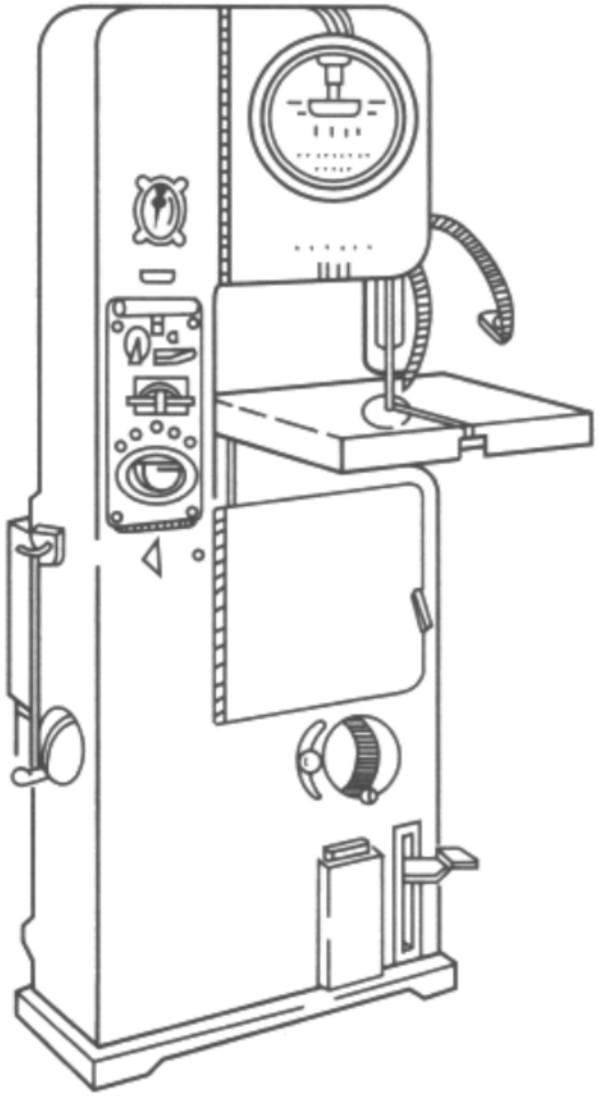

Sanderson Training Systems, A&P Technician Airframe Textbook, Jeppesen Sanderson Inc. (page 2-23)

Figure R-9 Scie à ruban

Unofficial convenience copy of A-CR-CCP-803/PF-002, cached 2026-11-08 from https://app.cadets.gc.ca/cadet-publications/A-CR-CCP-803-PF-002/A-CR-CCP-803-PF-002.pdf.
Verify against the official publication.

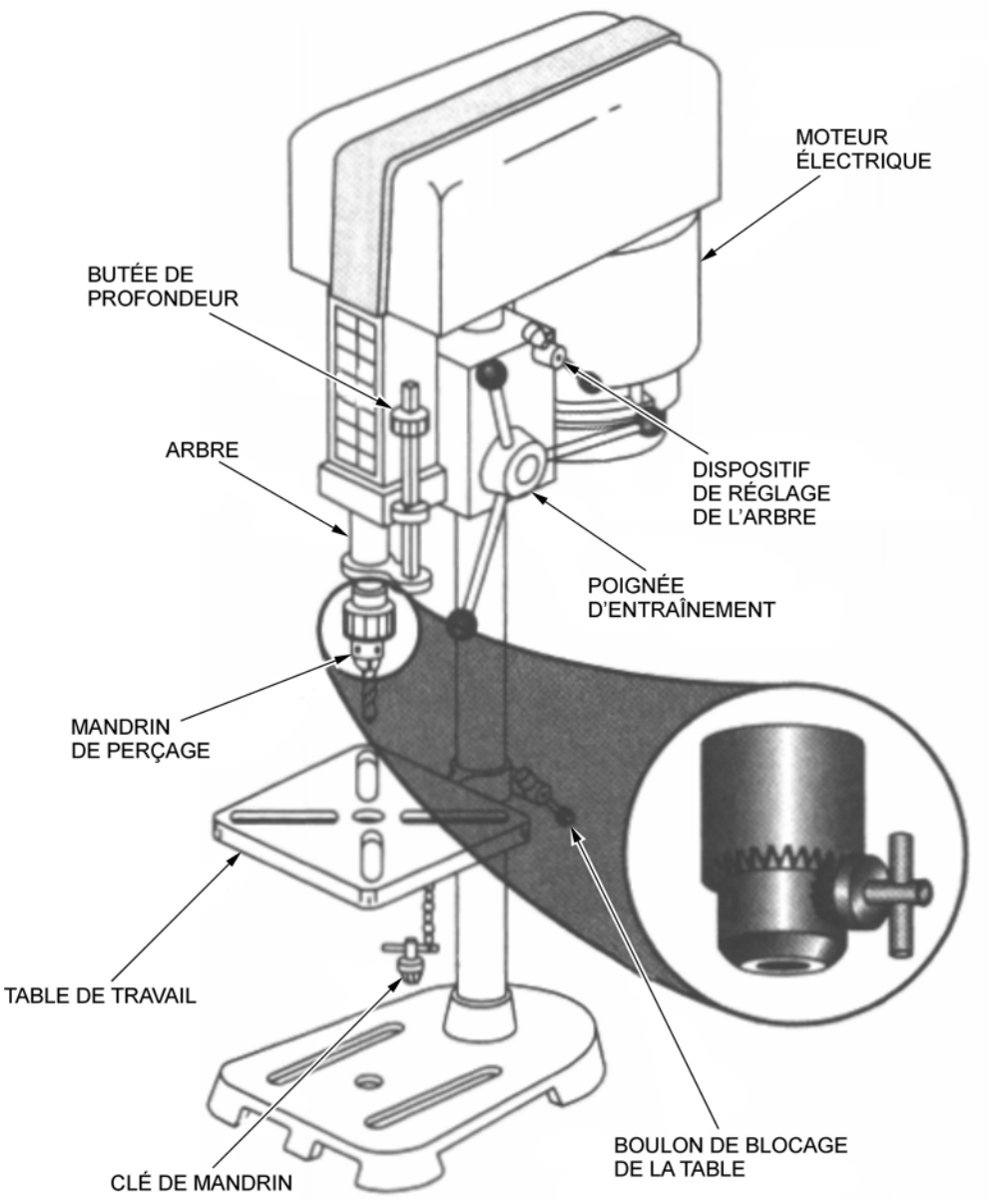

Sanderson Training Systems, A&P Technician Airframe Textbook, Jeppesen Sanderson Inc. (page 2-26)

Figure R-10 Perceuse à colonne

Unofficial convenience copy of A-CR-CCP-803/PF-002, cached 2026-11-08 from https://app.cadets.gc.ca/cadet-publications/A-CR-CCP-803-PF-002/A-CR-CCP-803-PF-002.pdf.
Verify against the official publication.

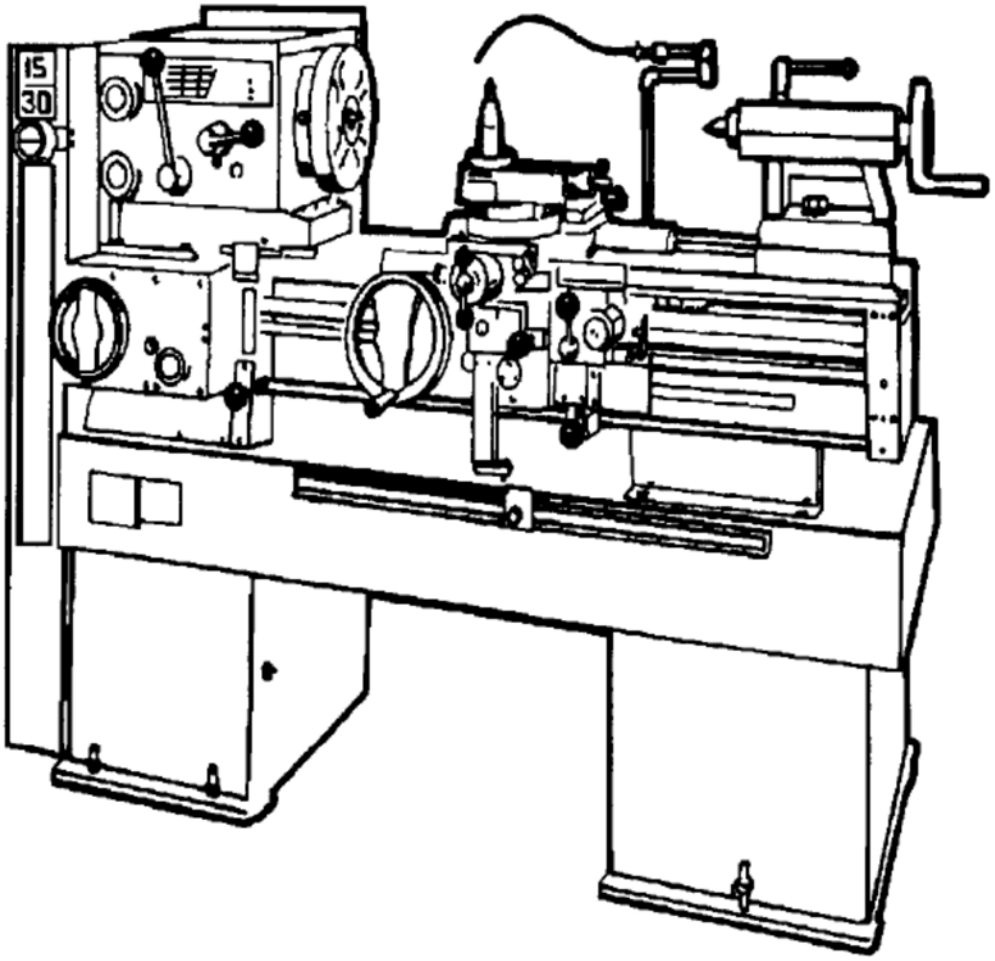

Fundamentals of Machine Tools. Headquarters Department of the Army, Washington DC, 1996, Training Circular No. 9-524. Extrait le 23 novembre 2007 du site http://metalworking.com/tutorials/army-TC-9-524/TOC.pdf

Figure R-11 Tour à métaux

Unofficial convenience copy of A-CR-CCP-803/PF-002, cached 2026-11-08 from https://app.cadets.gc.ca/cadet-publications/A-CR-CCP-803-PF-002/A-CR-CCP-803-PF-002.pdf.
Verify against the official publication.

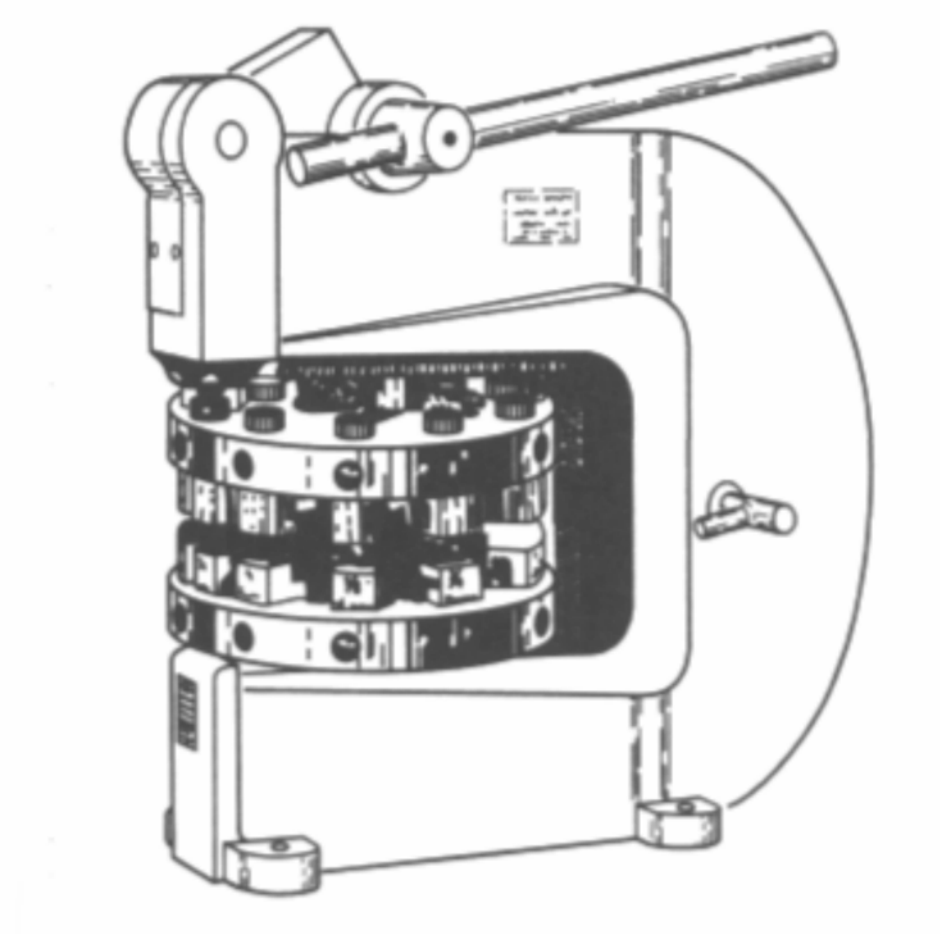

Sanderson Training Systems, A&P Technician Airframe Textbook, Jeppesen Sanderson Inc. (page 2-23)

Figure R-12 Presse à poinçonner rotative

Unofficial convenience copy of A-CR-CCP-803/PF-002, cached 2026-11-08 from https://app.cadets.gc.ca/cadet-publications/A-CR-CCP-803-PF-002/A-CR-CCP-803-PF-002.pdf.
Verify against the official publication.