**INSTRUMENTS**

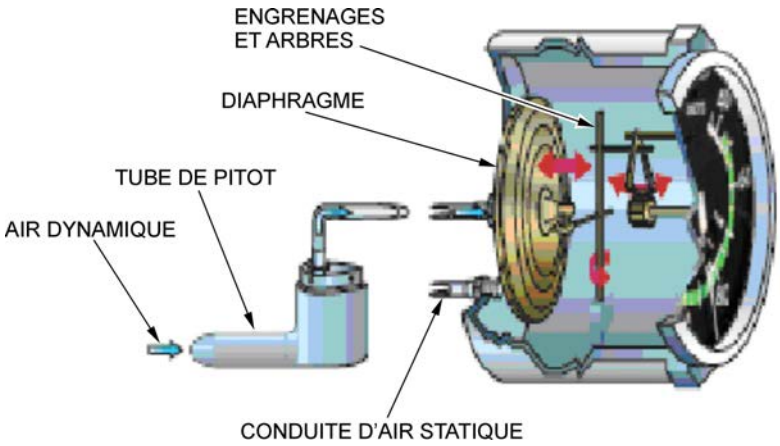


*Pilot's Handbook of Aeronautical Knowledge, « Flight Instruments », 2003, United States Department of Transportation Federal Aviation Administration Flight Standards Service. Extrait le 6 mars 2008 du site http://www.faa.gov/library/manuals/aviation/pilot_handbook/*

Figure B-1 Anémomètre




*North American Powered Parachute Federation, « Flight Instruments ». Extrait le 30 octobre 2007 du site http://www.nappf.com/nappf_flight_instruments.htm*

Figure B-2 Cadran d'un anémomètre



Unofficial convenience copy of A-CR-CCP-803/PF-002, cached 2026-11-08 from https://app.cadets.gc.ca/cadet-publications/A-CR-CCP-803-PF-002/A-CR-CCP-803-PF-002.pdf.
Verify against the official publication.

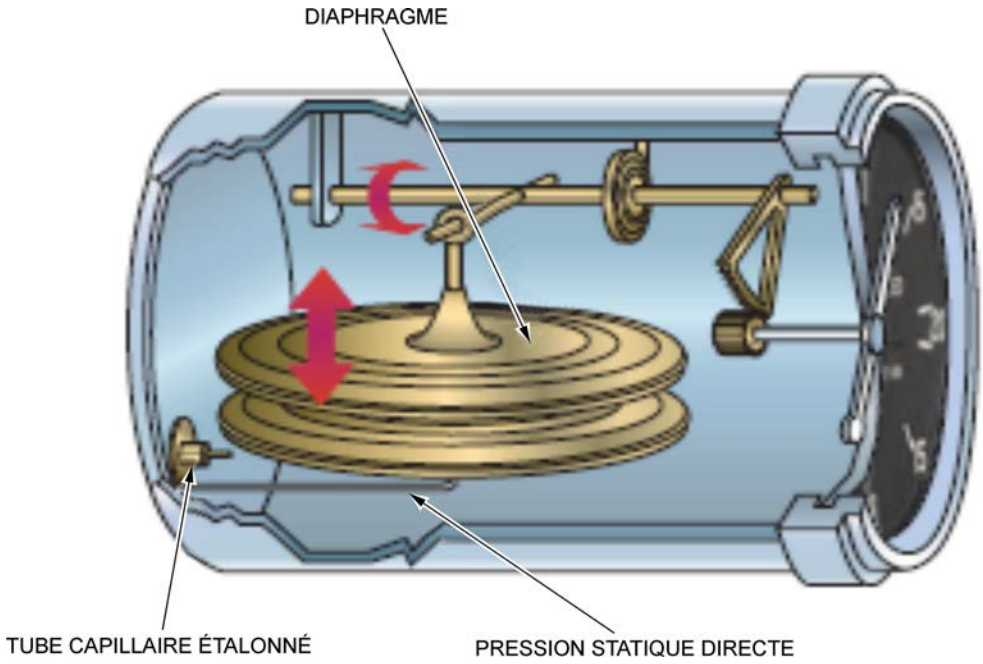


*Pilot's Handbook of Aeronautical Knowledge, « Flight Instruments », 2003, United States Department of Transportation Federal Aviation Administration Flight Standards Service. Extrait le 6 mars 2008 du site http://www.faa.gov/library/manuals/aviation/pilot_handbook/*

Figure B-3 Pièces d'un variomètre




*North American Powered Parachute Federation, « Flight Instruments ». Extrait le 30 octobre 2007 du site http://www.nappf.com/nappf_flight_instruments.htm*

Figure B-4 Cadran d'un variomètre



Unofficial convenience copy of A-CR-CCP-803/PF-002, cached 2026-11-08 from https://app.cadets.gc.ca/cadet-publications/A-CR-CCP-803-PF-002/A-CR-CCP-803-PF-002.pdf.
Verify against the official publication.

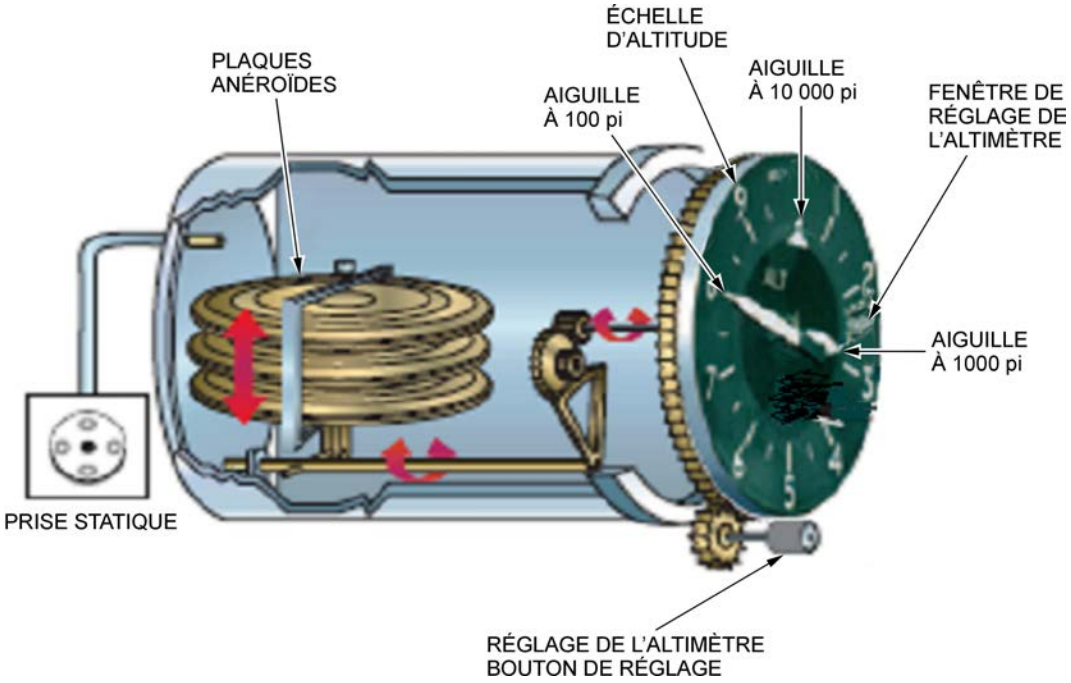


*Pilot's Handbook of Aeronautical Knowledge, « Flight Instruments », 2003, United States Department of Transportation Federal Aviation Administration Flight Standards Service. Extrait le 6 mars 2008 du site http://www.faa.gov/library/manuals/aviation/pilot_handbook/*

Figure B-5 Pièces d'un altimètre




*North American Powered Parachute Federation, « Flight Instruments ». Extrait le 30 octobre 2007 du site http://www.nappf.com/nappf_flight_instruments.htm*

Figure B-6 Cadran d'un altimètre



Unofficial convenience copy of A-CR-CCP-803/PF-002, cached 2026-11-08 from https://app.cadets.gc.ca/cadet-publications/A-CR-CCP-803-PF-002/A-CR-CCP-803-PF-002.pdf.
Verify against the official publication.

CETTE PAGE EST INTENTIONNELLEMENT LAISSÉE EN BLANC



Unofficial convenience copy of A-CR-CCP-803/PF-002, cached 2026-11-08 from https://app.cadets.gc.ca/cadet-publications/A-CR-CCP-803-PF-002/A-CR-CCP-803-PF-002.pdf.
Verify against the official publication.