**PLATEFORMES DE LANCEMENT**

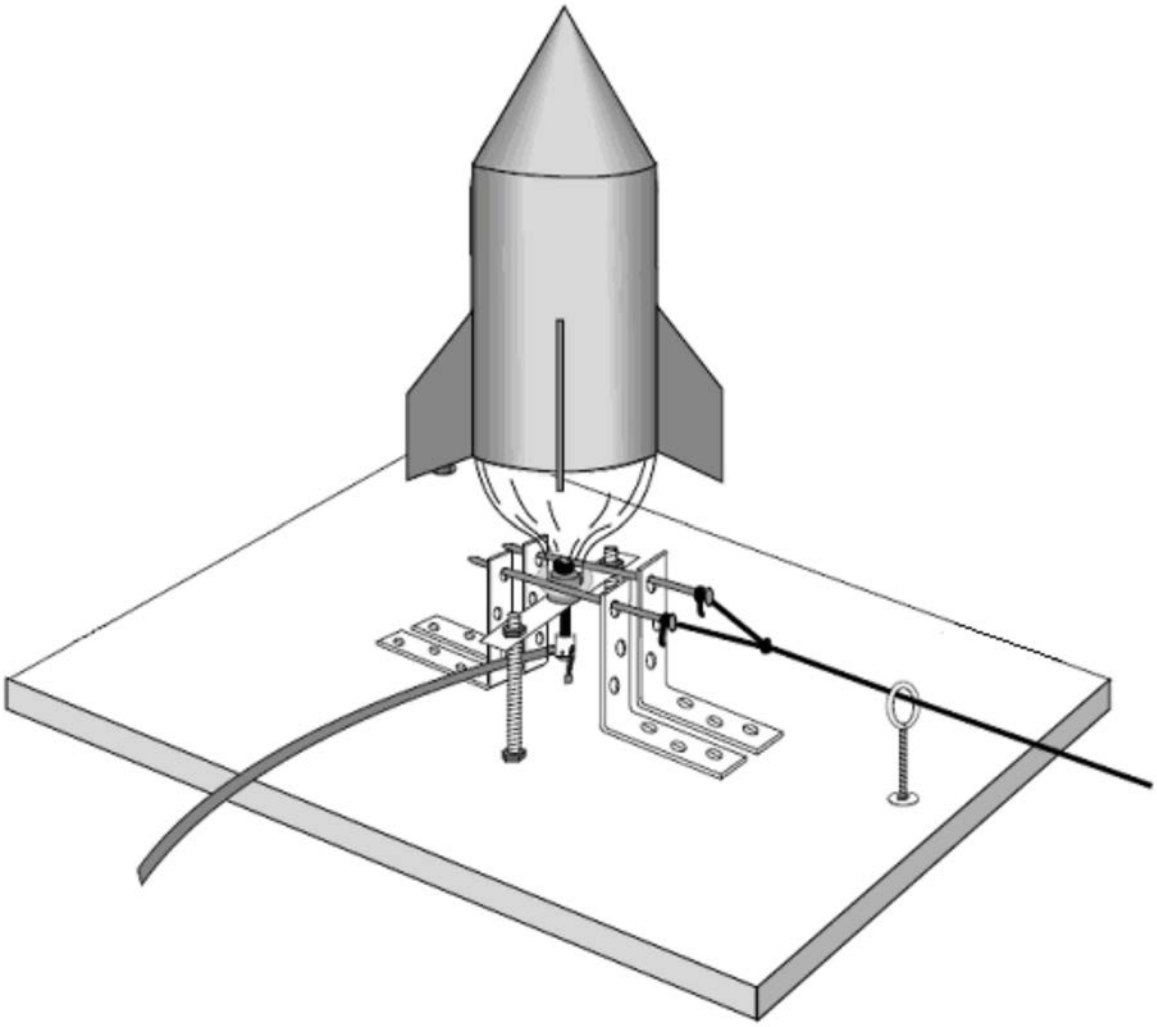

*« Rockets: A Teacher's Guide With Activities in Science, Mathematics, and Technology », par la NASA, 2003, Bottle Rocket Launcher. Extrait le 12 avril 2008 du site http://www.nasa.gov/pdf/153405main_Rockets.Guide.Bottle.Rocket.Launcher.pdf*

Figure W-1 Parties de la plateforme de lancement



Unofficial convenience copy of A-CR-CCP-803/PF-002, cached 2026-11-08 from https://app.cadets.gc.ca/cadet-publications/A-CR-CCP-803-PF-002/A-CR-CCP-803-PF-002.pdf.
Verify against the official publication.

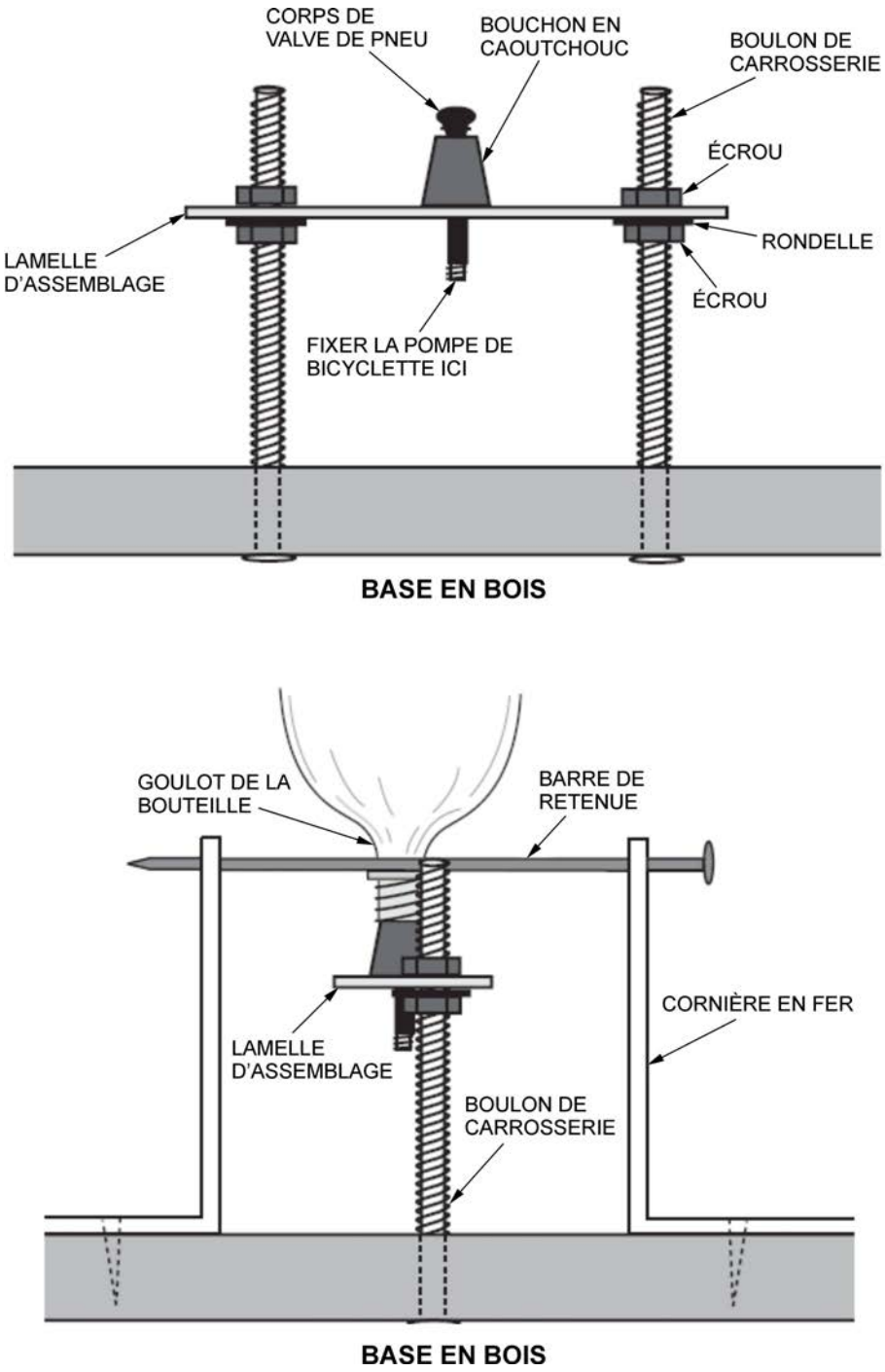


*« Rockets: A Teacher's Guide With Activities in Science, Mathematics, and Technology », par la NASA, 2003, Bottle Rocket Launcher. Extrait le 12 avril 2008 du site http://www.nasa.gov/pdf/153405main_Rockets.Guide.Bottle.Rocket.Launcher.pdf*

Figure W-2 Détails de la plateforme de lancement



Unofficial convenience copy of A-CR-CCP-803/PF-002, cached 2026-11-08 from https://app.cadets.gc.ca/cadet-publications/A-CR-CCP-803-PF-002/A-CR-CCP-803-PF-002.pdf.
Verify against the official publication.

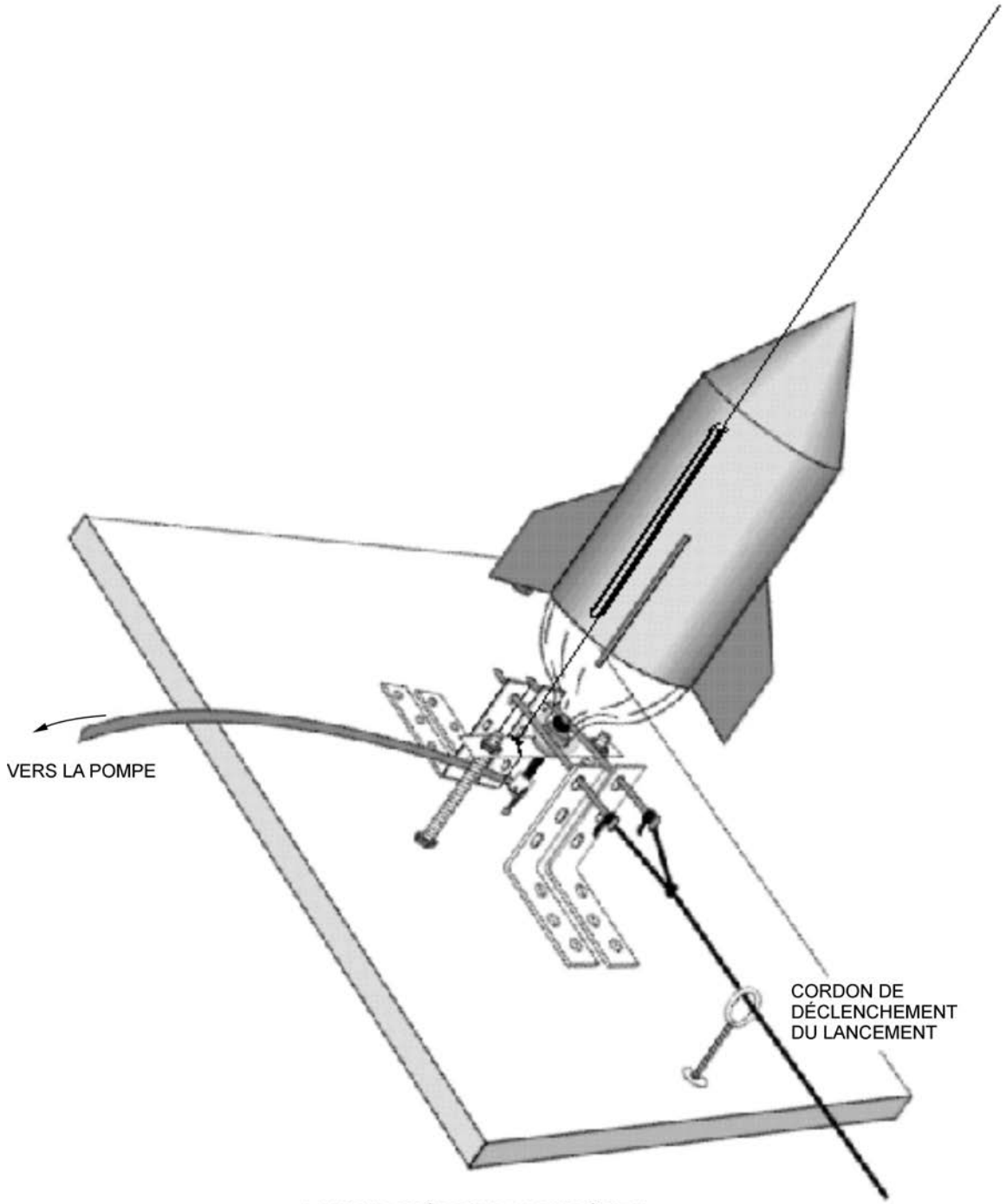


*« Rockets: A Teacher's Guide With Activities in Science, Mathematics, and Technology », par la NASA, 2003, Bottle Rocket Launcher. Extrait le 12 avril 2008 du site http://www.nasa.gov/pdf/153405main_Rockets.Guide.Bottle.Rocket.Launcher.pdf*

Figure W-3 Étape du lancement



Unofficial convenience copy of A-CR-CCP-803/PF-002, cached 2026-11-08 from https://app.cadets.gc.ca/cadet-publications/A-CR-CCP-803-PF-002/A-CR-CCP-803-PF-002.pdf.
Verify against the official publication.

CETTE PAGE EST INTENTIONNELLEMENT LAISSÉE EN BLANC



Unofficial convenience copy of A-CR-CCP-803/PF-002, cached 2026-11-08 from https://app.cadets.gc.ca/cadet-publications/A-CR-CCP-803-PF-002/A-CR-CCP-803-PF-002.pdf.
Verify against the official publication.