COMMON TRAINING

SILVER STAR

INSTRUCTIONAL GUIDE

SECTION 3

EO C306.02 – CORRECT MARKSMANSHIP ERROR

Total Time: 60 min

PREPARATION

PRE-LESSON INSTRUCTIONS

Resources needed for the delivery of this lesson are listed in the lesson specification located in A-CR-CCP-703/PG-001, Chapter 4. Specific uses for said resources are identified throughout the instructional guide within the TP for which they are required.

Review the lesson content and become familiar with the material prior to delivering the lesson.

Photocopy Annexes K and L for each cadet.

Photocopy the answer key located at Annex M for the instructor and assistant instructors.

Set up a mock firing point.

PRE-LESSON ASSIGNMENT

N/A.

APPROACH

An interactive lecture was chosen for TPs 1–3 to give an overview of the theories and the practice of adjusting sights.

A practical activity was chosen for TP 4 as it is an interactive way to introduce and allow cadets to experience adjusting sights on the cadet air rifle in a controlled environment. This activity contributes to the development of sight adjustment skills and knowledge in a fun and challenging setting.

INTRODUCTION

REVIEW

N/A.

OBJECTIVES

By the end of this lesson the cadet is expected to correct marksmanship error by adjusting elevation and windage on the cadet air rifle.

Unofficial convenience copy of A-CR-CCP-703/PF-001, cached 2026-11-08 from https://app.cadets.gc.ca/cadet-publications/A-CR-CCP-703-PF-001/A-CR-CCP-703-PF-001.pdf.
Verify against the official publication.

IMPORTANCE

It is important for the cadets to learn how to correct marksmanship error in order to zero the cadet air rifle when participating in a marksmanship activity. A zeroed rifle will give the marksman the assurance that the centre of the target is properly aligned with themself and their rifle. Having a zeroed rifle and knowing how to zero a rifle is important to every marksman in order to achieve a higher score in application activities.

Teaching point 1 **Explain Centring the Group**

Time: 10 min Method: Interactive Lecture

THE THEORY OF A GROUP

When a series of three or more shots are fired from the same point of aim, they will seldom pass through the same point on the target. The pattern that is produced from the shot holes in the target is called a group.

Factors Affecting the Group

There are three factors that affect the shape and size of the group:

- **The Ammunition.** Even though every pellet is manufactured to be exactly the same, slight variations in each pellet will result in slight variations in results when firing. The number of pellets used will also affect the group size.
- **The Rifle.** Each rifle will fire a pellet with its own slight variation due to small differences in the barrel and firing mechanisms.
- **The Marksman.** Factors associated with the marksman's aiming, holding, breathing and follow-through techniques will affect each shot.

MEAN POINT OF IMPACT (MPI)



Ensure the handout located at Annex K is passed out to the cadets during this portion of the lesson to allow the cadets to see how the MPI moves as more pellets are shot into the target.

The MPI is the point on the target which is the average centre between all shots on the target. As each shot is fired, the MPI changes as the group develops. To centre the group correctly, corrections should be based on the MPI.

To determine the MPI, each shot must be evaluated. It takes at least two shots for an MPI to be determined. For two shots, the MPI will be the point centred between the two shots. After firing three shots, the MPI will change so that the MPI is centred between all three shots (as illustrated in Figure 1).

Unofficial convenience copy of A-CR-CCP-703/PF-001, cached 2026-11-08 from https://app.cadets.gc.ca/cadet-publications/A-CR-CCP-703-PF-001/A-CR-CCP-703-PF-001.pdf.
Verify against the official publication.

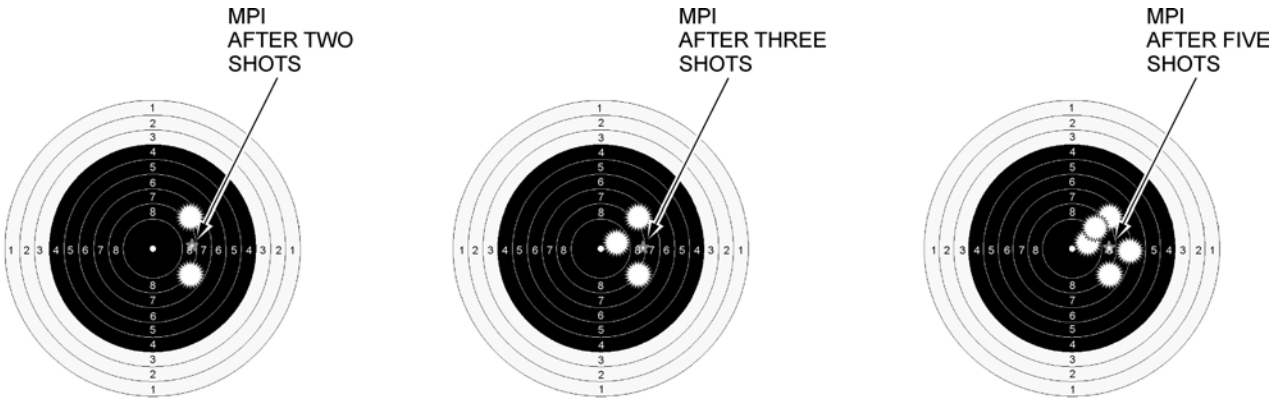

Director Cadets 3, 2007, Ottawa, ON: Department of National Defence

Figure 1 MPI Examples

CONFIRMATION OF TEACHING POINT 1

QUESTIONS

Q1. Define the term group.

Q2. What are the three factors that affect the size and shape of the group?

Q3. What is the definition of MPI?

ANTICIPATED ANSWERS

A1. The pattern that is produced from the shot holes in a target.

A2. The three factors that affect the shape and size of the group:

- the ammunition,
- the rifle, and
- the marksman.

A3. The MPI is the point on the target which is the average centre between all shots on the target.

Teaching point 2 **Explain Sight Adjustment**

Time: 10 min Method: Interactive Lecture

THE PURPOSE OF SIGHT ADJUSTMENT

Sight adjustment is used to ensure that the rifle is zeroed to the marksman. Sight adjustment will not make up for poor marksmanship skills, but may aid the proficient marksman in aligning their grouping to a target. There are two different ways a sight can be adjusted in order to zero the rifle: the windage and the elevation.

ELEVATION

Elevation affects the pellet by moving its vertical position, which moves the point of impact up or down the target. It compensates for the trajectory drop of the pellet.

Unofficial convenience copy of A-CR-CCP-703/PF-001, cached 2026-11-08 from https://app.cadets.gc.ca/cadet-publications/A-CR-CCP-703-PF-001/A-CR-CCP-703-PF-001.pdf.
Verify against the official publication.

WINDAGE

Windage affects the pellet by moving its horizontal position, which moves the point of impact left or right. It compensates for the direction and force of the wind on the pellet.

A ZEROED CADET AIR RIFLE

A zeroed cadet air rifle is accurate for a particular marksman at a particular position and distance from the target. A zeroed cadet air rifle has a particular sight setting that will be perfectly aimed, by putting pellets directly into the centre of the target.

CONFIRMATION OF TEACHING POINT 2

QUESTIONS

Q1. What is the purpose of adjusting the sights on a rifle?

Q2. What does the elevation adjustment refer to?

Q3. What does the windage adjustment refer to?

ANTICIPATED ANSWERS

A1. Sight adjustment is used to ensure the rifle is zeroed to the marksman.

A2. Elevation adjustment refers to the adjustment required to compensate for the trajectory drop of the pellet.

A3. Windage adjustment refers to the adjustment required to compensate for the direction and force of the wind on the pellet.

Teaching point 3 **Explain the Increments of Sight Adjustment**

Time: 5 min Method: Interactive Lecture



Ensure the cadets have a cadet air rifle in front of them during this portion of the lesson in order to see the actual sight of the cadet air rifle and the means in which it functions.

SIGHT ADJUSTMENT OF THE CADET AIR RIFLE

Sight adjustment of the cadet air rifle is achieved by turning the knobs of the rear sight. The elevation adjustment knob is found on the top of the rear sight and the windage elevation knob is found on the right-hand side of the rear sight. They are used to move the MPI of the shot either left or right and up or down. The adjustment of these knobs is measured in clicks that can be felt as the knob is turned. It takes three clicks to move the point of impact approximately one pellet width in any direction.

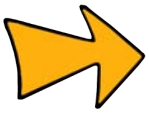

At a distance of 10 m, each click equals approximately a 1.219 mm shift of the MPI.

Unofficial convenience copy of A-CR-CCP-703/PF-001, cached 2026-11-08 from https://app.cadets.gc.ca/cadet-publications/A-CR-CCP-703-PF-001/A-CR-CCP-703-PF-001.pdf.
Verify against the official publication.

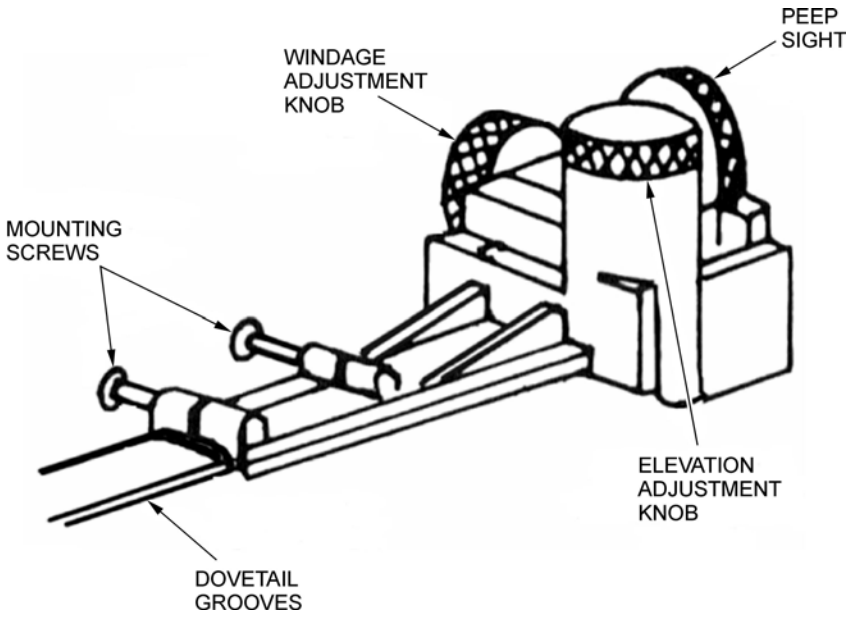

Rogers, AR., AVANTI Competition Pellet Rifle: Operation Manual: AVANTI Legend Model 853, Daisy Outdoor Products (p. 6)

Figure 2 Rear Sight of the Cadet Air Rifle

LOWERING AND RAISING THE ELEVATION

To lower the elevation of the MPI, turn the elevation knob counter-clockwise (to the left). To raise the elevation of the MPI, turn the elevation knob clockwise (to the right), as per the arrow and the word “UP” located on the knob.

MOVING THE WINDAGE LEFT AND RIGHT

To move the MPI left, turn the windage knob counter-clockwise (to the left). To move the MPI to the right, turn the windage knob clockwise (to the right), as per the arrow and the letter “R” located on the knob.



In order to move the MPI up and to the right turn the elevation and windage knobs clockwise.

In order to move the MPI down and left turn the elevation and windage knobs counter-clockwise.

Unofficial convenience copy of A-CR-CCP-703/PF-001, cached 2026-11-08 from https://app.cadets.gc.ca/cadet-publications/A-CR-CCP-703-PF-001/A-CR-CCP-703-PF-001.pdf.
Verify against the official publication.

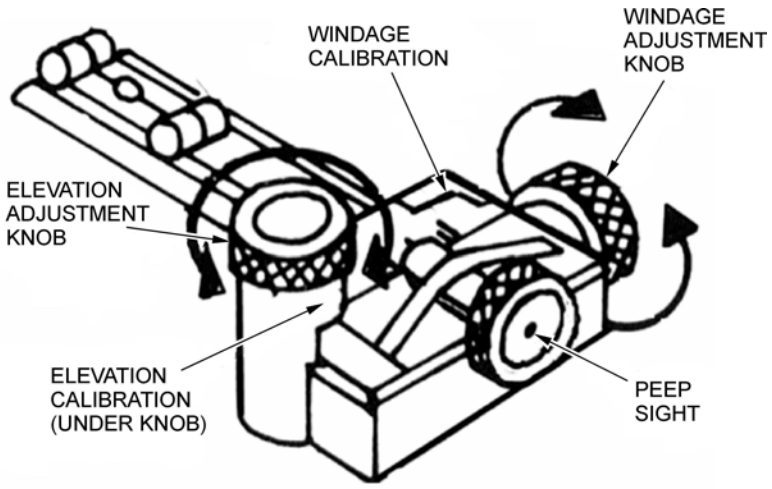

Rogers, AR., AVANTI Competition Pellet Rifle: Operation Manual: AVANTI Legend Model 853, Daisy Outdoor Products (p. 6)

Figure 3 Sight Adjustment of the Cadet Air Rifle

CONFIRMATION OF TEACHING POINT 3

QUESTIONS

Q1. How many clicks on the adjustment knob will move the MPI on the target one pellet width in any direction?

Q2. What direction does the marksman turn the elevation adjustment knob in order to raise the MPI?

Q3. What direction does the marksman turn the windage adjustment knob in order to move the MPI to the left?

ANTICIPATED ANSWERS

A1. In order to move the MPI on the target one pellet width, three clicks are required.

A2. The marksman turns the elevation adjustment knob clockwise (to the right) in order to raise the MPI.

A3. The marksman turns the windage adjustment knob counter-clockwise (to the left) in order to move the MPI to the left.

Teaching point 4 **Conduct a Sight Adjustment Exercise**

Time: 30 min Method: Practical Activity



Each pair of cadets will complete the exercise located at Annex L and then practice adjusting their sights.

An assistant instructor may be used to aid the cadets in the completion of this activity.

ACTIVITY

OBJECTIVE

The objective of this activity is to confirm that each cadet can determine the MPI and adjust sights accordingly on the cadet air rifle.

Unofficial convenience copy of A-CR-CCP-703/PF-001, cached 2026-11-08 from https://app.cadets.gc.ca/cadet-publications/A-CR-CCP-703-PF-001/A-CR-CCP-703-PF-001.pdf.
Verify against the official publication.

RESOURCES

- Cadet air rifle (one per firing lane),
- Sight adjustment activity targets located at Annex L, and
- Pencil/pen.

ACTIVITY LAYOUT

A mock firing point.

ACTIVITY INSTRUCTIONS

1. Divide the cadets into pairs.
2. Distribute the exercise located at Annex L to each cadet.
3. Have the cadets, in pairs, determine the MPI of all five shots for each scoring diagram.
4. Have the cadets put an asterisk to indicate the MPI.
5. Have the cadets determine the vertical and horizontal distance, in clicks, that the MPI must move to be aimed at the centre of the target.
6. Have the cadets write the number of clicks required for the windage and elevation, marking whether to turn the knob clockwise (cw) or counter-clockwise (ccw).
7. Have the cadets practice adjusting the sights on the cadet air rifle for each scoring diagram.
8. Correct using the answer key located at Annex M.

SAFETY

Ensure the following:

- the cadet air rifles are safe by performing individual safety precautions IAW A-CR-CCP-177/PT-001;
- all cadet air rifles are pointed in a safe direction throughout the lesson;
- no pellets or cleaning pellets are present in the training area; and
- all other applicable safety regulations are followed IAW local range standing orders.

CONFIRMATION OF TEACHING POINT 4

The cadets' participation in the activity will serve as the confirmation of this TP.

END OF LESSON CONFIRMATION

The cadets' participation in the sight adjustment exercise will serve as the confirmation of this lesson.

CONCLUSION

HOMEWORK/READING/PRACTICE

N/A.

Unofficial convenience copy of A-CR-CCP-703/PF-001, cached 2026-11-08 from https://app.cadets.gc.ca/cadet-publications/A-CR-CCP-703-PF-001/A-CR-CCP-703-PF-001.pdf.
Verify against the official publication.

METHOD OF EVALUATION

N/A.

CLOSING STATEMENT

Correcting marksmanship error is necessary to achieve success in marksmanship activities. It ensures that the marksman, the rifle and the target are aligned and that the centre of aim is in the centre of the target. It is important for each marksman to understand how to adjust their sights in order to achieve a completely aligned rifle.

INSTRUCTOR NOTES/REMARKS

N/A.

REFERENCES

A0-027 A-CR-CCP-177/PT-001 Director Cadets 3. (2001). *Canadian Cadet Movement: Cadet Marksmanship Program Reference Manual*. Ottawa, ON: Department of National Defence.

C2-097 Ontario Rifle Association. (2003). *Ontario Rifle Association Handbook for New Member*. Haliburton County, ON: MilCun Marksmanship Complex.

C2-098 (ISBN 1-931220-05-0) Constantine, R. (1998). *Modern Highpower Competition: From Beginner to Master*. Manchester, CT: Precision Shooting Inc.

Unofficial convenience copy of A-CR-CCP-703/PF-001, cached 2026-11-08 from https://app.cadets.gc.ca/cadet-publications/A-CR-CCP-703-PF-001/A-CR-CCP-703-PF-001.pdf.
Verify against the official publication.