ROYAL CANADIAN ARMY CADETS

RED STAR

INSTRUCTIONAL GUIDE

SECTION 11

EO C221.02 – CONSTRUCT FIELD AMENITIES

Total Time: 180 min

PREPARATION

PRE-LESSON INSTRUCTIONS

Resources needed for the delivery of this lesson are listed in the lesson specification located in A-CR-CCP-702/PG-001, Chapter 4. Specific uses for said resources are identified throughout the Instructional Guide within the TP for which they are required.

Review the lesson content and become familiar with the material prior to delivering the lesson.

Make copies of the handouts located at Annexes A and B for each cadet.

PRE-LESSON ASSIGNMENT

Each cadet must gather three sticks or poles approximately one inch in diameter prior to this lesson.

APPROACH

Demonstration and performance was chosen for TP1 as it allows the instructor to explain and demonstrate tying lashings while providing an opportunity for the cadets to practice tying lashings under supervision.

A practical activity was chosen for TP2 as it is an interactive way to allow the cadet to experience building field amenities in a safe, controlled environment. This activity contributes to the development of lashing skills and knowledge in a fun and challenging setting.

INTRODUCTION

REVIEW

A review of the parts of a rope, from EO M121.03 (Tie Knots and Lashings) may be required before beginning this lesson.

OBJECTIVES

By the end of this lesson the cadet shall have constructed two field amenities, using knots and lashings.

IMPORTANCE

It is important for cadets to know how to tie knots and lashings. Constructing field amenities is a fun way to incorporate knot tying to enhance a field training site.

Unofficial convenience copy of A-CR-CCP-702/PF-001, cached 2026-11-08 from https://app.cadets.gc.ca/cadet-publications/A-CR-CCP-702-PF-001/A-CR-CCP-702-PF-001.pdf.
Verify against the official publication.

Teaching point 1 **Explain, Demonstrate, and Allow Time for Cadets to Practice Tying Lashings**

Time: 40 min Method: Demonstration and Performance



Distribute handouts for tying lashings.

For this skill lesson it is recommended that instruction take the following format:

(1) Explain and demonstrate that complete skill while cadets observe.

(2) Explain and demonstrate each step required to complete the skill. Monitor cadets as they imitate each step.

(3) Monitor the cadets' performance as they practice the complete skill.

Note: Assistant instructors may be employed to monitor cadet performance.

SHEER LASHING

Also called a round lashing, it has two distinct uses. First, it creates an A-frame or set of sheer legs. Second, two or three sheer lashings can be used to bind poles together to make a longer spar (horizontal pole).

Procedure

1. Make a clove hitch around both poles.
2. Wrap the standing end around both poles, trapping the working end of the clove hitch underneath.
3. Make eight to ten more wraps around the poles.
4. Bring the rope up between the spars and make two tight turns parallel to the poles.
5. Make a clove hitch around one of the poles.
6. Ensure the lashing is tight and secure.
7. Sheer lashing opened to create a pair of sheer legs or an A-frame.

Unofficial convenience copy of A-CR-CCP-702/PF-001, cached 2026-11-08 from https://app.cadets.gc.ca/cadet-publications/A-CR-CCP-702-PF-001/A-CR-CCP-702-PF-001.pdf.
Verify against the official publication.

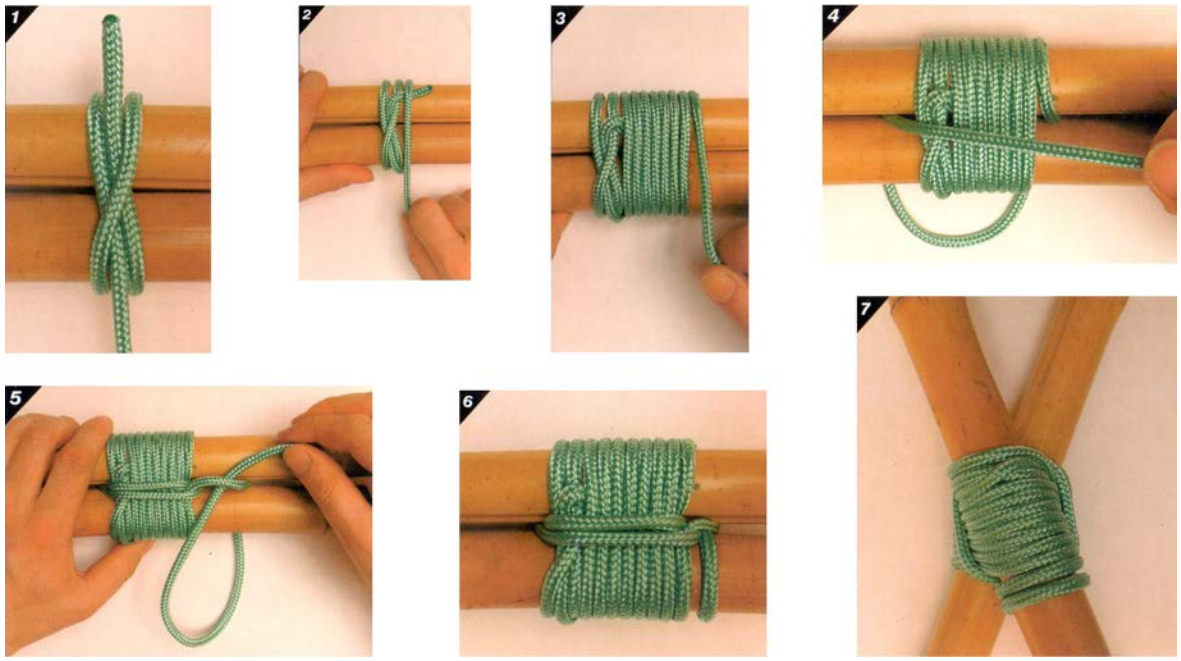

Pawson, D., Pocket Guide to Knots & Splices, Chartwell Books, Inc. (pp. 184-185)

Figure 1 Sheer Lashing

SQUARE LASHING

A square lashing secures two poles together at 90 degrees. The rope used to make the lashing should be considerably smaller than the size of the poles. For the lashing to be effective, each turn must be pulled as tight as possible as it is made.

Procedure

1. With the vertical pole on top of the horizontal pole, make a clove hitch. The vertical pole runs up and down, and the horizontal pole left to right.

2. Bring all of the rope around and behind the horizontal pole.

3. Tightly bring the rope over the vertical pole and back behind the horizontal pole, back to the clove hitch.

4. Continue to make three complete turns around the poles, pulling the rope tight after each turn.

5. After passing the clove hitch, tightly bring the rope to the horizontal pole from behind and start wrapping around the two poles. These wraps are called frapping turns.

6. Make two complete sets of frapping turns.

7. Make a clove hitch around the horizontal pole.

8. Ensure lashing is tight and secure.

Unofficial convenience copy of A-CR-CCP-702/PF-001, cached 2026-11-08 from https://app.cadets.gc.ca/cadet-publications/A-CR-CCP-702-PF-001/A-CR-CCP-702-PF-001.pdf.
Verify against the official publication.

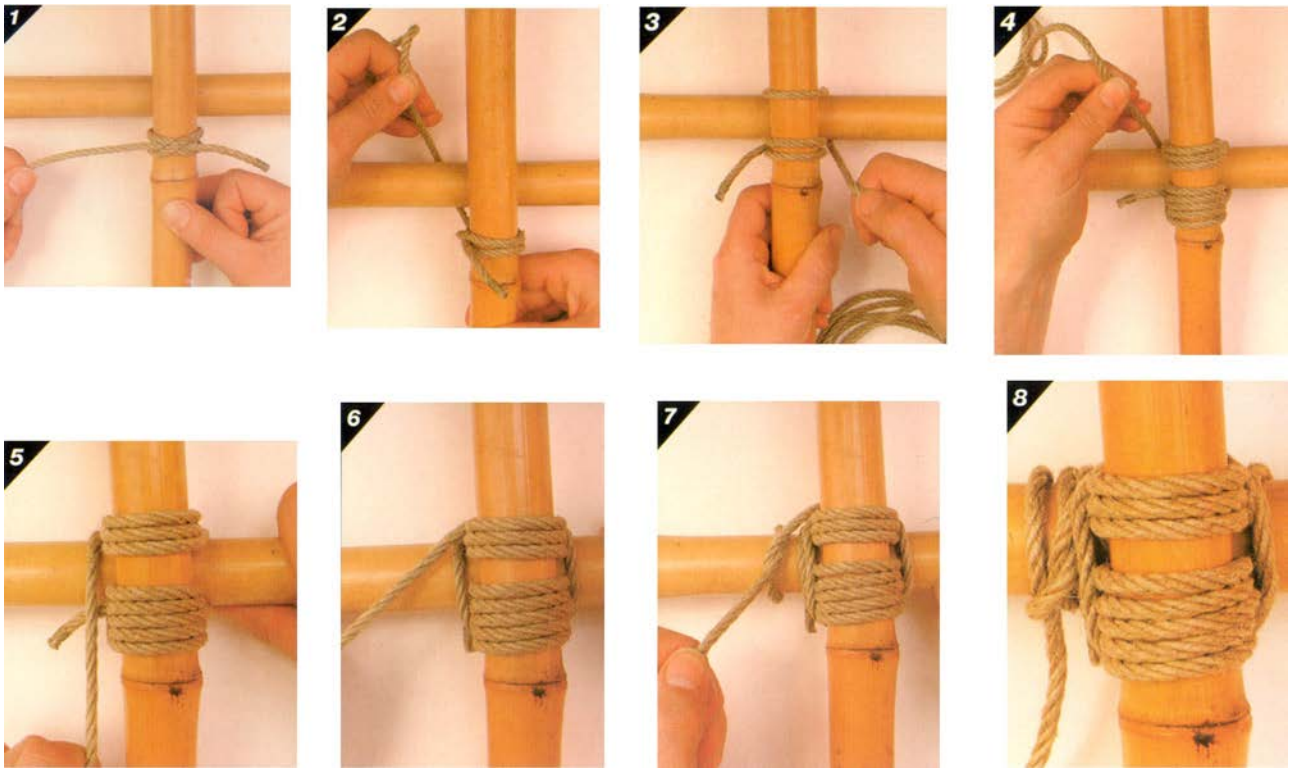

Pawson, D., Pocket Guide to Knots & Splices, Chartwell Books, Inc. (pp. 180-181)

Figure 2 Square Lashing

TIMBER HITCH



The timber hitch is included because it is required for the diagonal lashing. It should not take a great amount of time to complete.

Procedure

1. Take the standing end and wrap it around the object, then around the standing part of the rope.

2. Twist the working part around itself by wrapping it around the working end.

3. Continue making twists until the twisted rope is long enough to go around the object. Pull on the standing part to tighten the hitch.

Unofficial convenience copy of A-CR-CCP-702/PF-001, cached 2026-11-08 from https://app.cadets.gc.ca/cadet-publications/A-CR-CCP-702-PF-001/A-CR-CCP-702-PF-001.pdf.
Verify against the official publication.



Pawson, D., Pocket Guide to Knots & Splices, Chartwell Books, Inc. (p. 139)

Figure 3 Timber Hitch

DIAGONAL LASHING

A diagonal lashing is used at a crossing point, to prevent poles from springing apart.

Procedure

1. Make a timber hitch around the two crossed poles.
2. Make a turn around the two crossed poles, pulling the timber hitch tight.
3. Make three more complete turns in the same direction, pulling them tight.
4. Change direction by coming around one of the poles.
5. Make four full turns around the two poles at right angles to the original turns, pulling them tight.
6. Take the working end of the rope around one of the poles, making a frapping turn.
7. Make two complete frapping turns.
8. Make a clove hitch.
9. Ensure lashing is tight and secure.

Unofficial convenience copy of A-CR-CCP-702/PF-001, cached 2026-11-08 from https://app.cadets.gc.ca/cadet-publications/A-CR-CCP-702-PF-001/A-CR-CCP-702-PF-001.pdf.
Verify against the official publication.

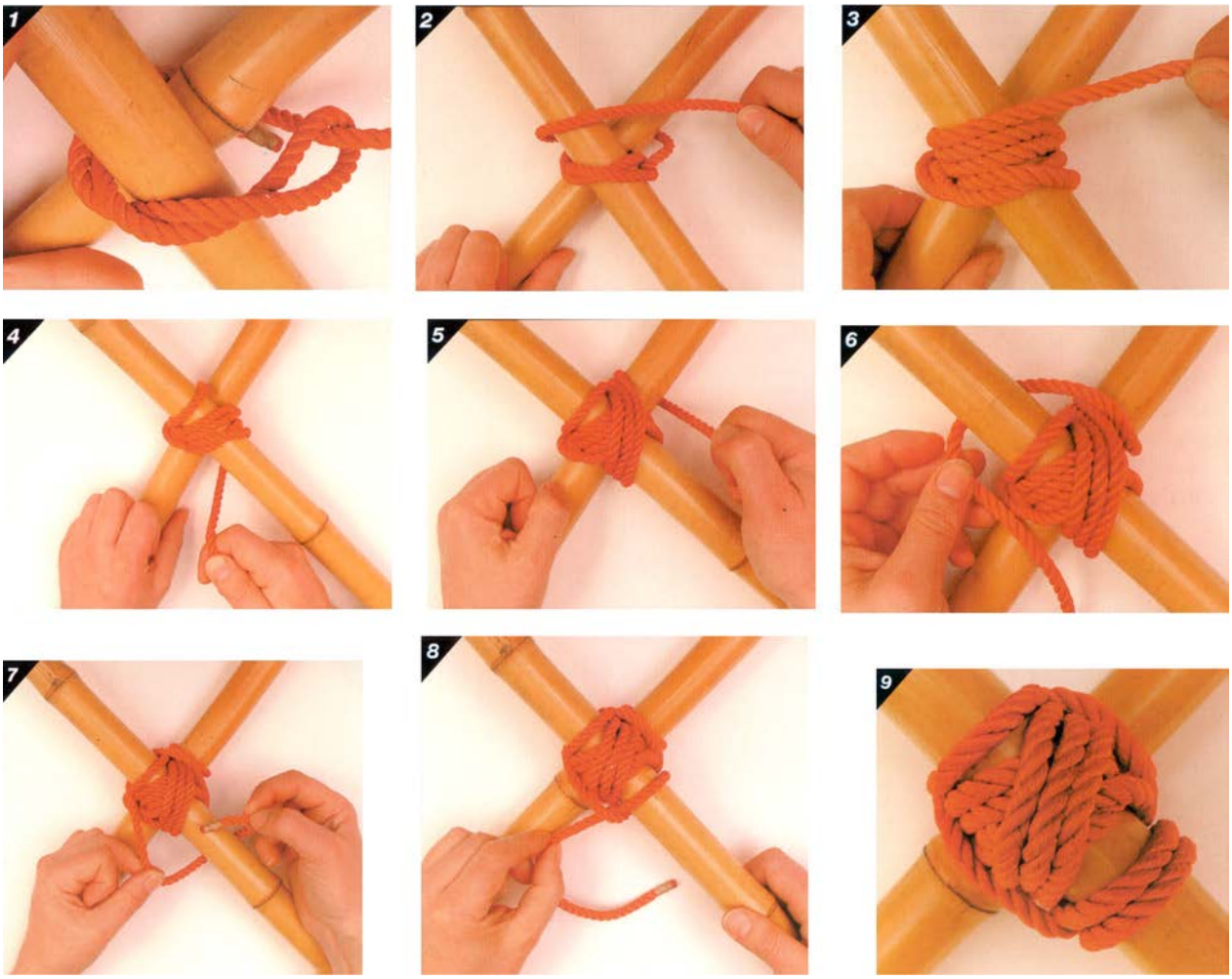

Pawson, D., Pocket Guide to Knots & Splices, Chartwell Books, Inc. (pp. 182-183)

Figure 4 Diagonal Lashing

FIGURE-OF-EIGHT LASHING

The figure-of-eight lashing is used to join three poles together, to create a tripod.



When making a figure-of-eight lashing, the poles shall be placed staggered (see diagram below).

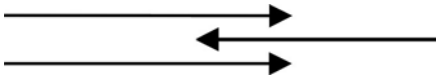

Procedure

1. Make a clove hitch around one of the outside poles. Bring the rope under and over the other poles.
2. Go around the pole furthest away from the start and weave the rope back over and under.
3. Continue to weave the rope under and over eight times. Bring the rope up in between any two poles.

Unofficial convenience copy of A-CR-CCP-702/PF-001, cached 2026-11-08 from https://app.cadets.gc.ca/cadet-publications/A-CR-CCP-702-PF-001/A-CR-CCP-702-PF-001.pdf.
Verify against the official publication.

4. Pull the rope parallel to the poles and put in two frapping turns.
5. Make three frapping turns in between the remaining poles.
6. Make a clove hitch around the pole that already has a clove hitch (from the beginning) at the opposite end.
7. Open up the poles.

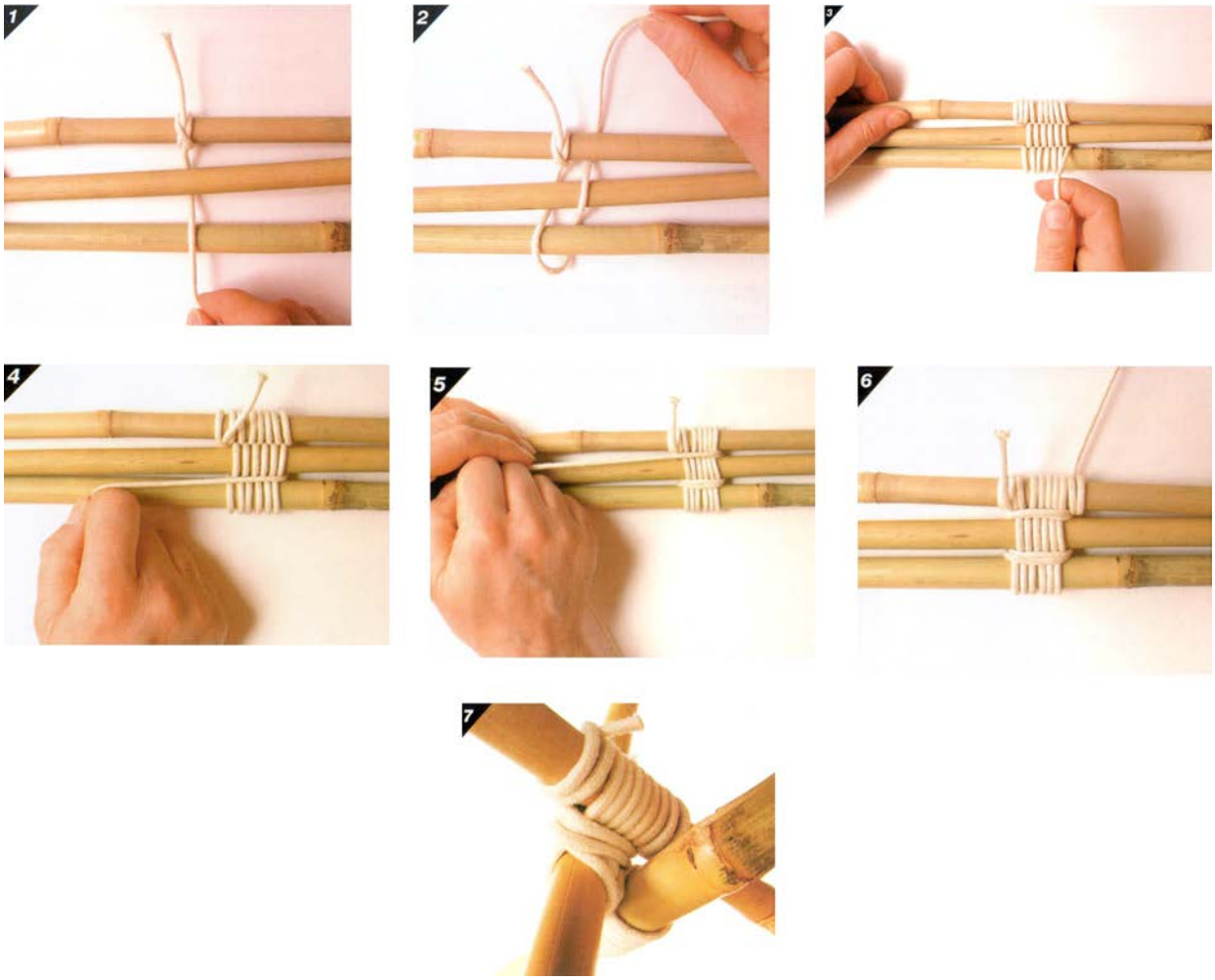

Pawson, D., Pocket Guide to Knots & Splices, Chartwell Books, Inc. (pp. 187-188)

Figure 5 Figure-of-eight Lashing

CONFIRMATION OF TEACHING POINT 1

The cadets' participation in tying the lashings will serve as the confirmation of this TP.

Unofficial convenience copy of A-CR-CCP-702/PF-001, cached 2026-11-08 from https://app.cadets.gc.ca/cadet-publications/A-CR-CCP-702-PF-001/A-CR-CCP-702-PF-001.pdf.
Verify against the official publication.

Teaching point 2 **Construct Field Amenities**

Time: 130 min Method: Practical Activity

FIELD AMENITIES

Field amenities will be chosen from the following:

- a bench with back rest;
- a camp table;
- a bulletin board; and
- a podium.



Pictures and instructions of field amenities are located at Annex B.

ACTIVITY

OBJECTIVE

The objective of this activity is to construct field amenities for a bivouac site, using the knots and lashings learned.

RESOURCES

- Rope;
- Natural resources, found in the field;
- 4 lb axe (36-inch handle);
- 24-inch bow saw; and
- Diagrams of field amenities (located at Annex B).

ACTIVITY LAYOUT

N/A.

ACTIVITY INSTRUCTIONS

1. Divide cadets into groups with a minimum of four and a maximum of eight.

2. Depending on need and availability of resources, allow cadets to choose the field amenity they will construct.

3. Distribute instructions located at Annex B. Cadets will be required to select and utilize the most effective knots and lashings to make their field amenity.

Unofficial convenience copy of A-CR-CCP-702/PF-001, cached 2026-11-08 from https://app.cadets.gc.ca/cadet-publications/A-CR-CCP-702-PF-001/A-CR-CCP-702-PF-001.pdf.
Verify against the official publication.

4. When amenities are completed, allow time for groups to view all constructed amenities.

5. Depending on local regulations, all material used in the construction shall be redistributed to the area once the activity is completed.

SAFETY

- Ensure cadets are employing safe tool use at all times.
- The wood chosen for the field amenities must be strong enough to hold a substantial amount of weight.
- Established boundaries shall be respected at all times.

CONFIRMATION OF TEACHING POINT 2

The cadets' participation in the activity will serve as the confirmation of this TP.

END OF LESSON CONFIRMATION

The cadets' participation in the construction of field amenities in TP2 will serve as the confirmation of this lesson.

CONCLUSION

HOMEWORK/READING/PRACTICE

N/A.

METHOD OF EVALUATION

N/A.

CLOSING STATEMENT

Field amenities will enhance any base camp. They are relatively easy to construct and are a fun way to reinforce usage of knots. They can make cadets comfortable in the field when it is a home away from home.

INSTRUCTOR NOTES/REMARKS

Natural resources found in the field, such as fallen or dead wood, are to be used for construction. Instructors are to confirm with local authorities that natural resources may be used for this activity.

If field amenities are being evaluated, they shall be judged on stability, quality of lashings, and overall appearance.

REFERENCES

C2-007 (ISBN 0-7858-1446-9) Pawson, D. (2001). *Pocket Guide to Knots and Splices*. Edison, NJ: Chartwell Books, Inc.

C2-008 (ISBN 0-00-265314-7) Wiseman, J. (1999). *The SAS Survival Handbook*. Hammersmith, London: HarperCollins Publishers.

C2-046 PioneeringProjects.org (2004). *PioneeringProjects.org*. Retrieved 20 February 2007, from http://www.pioneeringprojects.org/projects/index.htm.

Unofficial convenience copy of A-CR-CCP-702/PF-001, cached 2026-11-08 from https://app.cadets.gc.ca/cadet-publications/A-CR-CCP-702-PF-001/A-CR-CCP-702-PF-001.pdf.
Verify against the official publication.

THIS PAGE INTENTIONALLY LEFT BLANK

Unofficial convenience copy of A-CR-CCP-702/PF-001, cached 2026-11-08 from https://app.cadets.gc.ca/cadet-publications/A-CR-CCP-702-PF-001/A-CR-CCP-702-PF-001.pdf.
Verify against the official publication.

TYING LASHINGS

SHEER LASHING

Procedure

1. Make a clove hitch around both poles.
2. Wrap the standing end around both poles, trapping the working end of the clove hitch underneath.
3. Make eight to ten more wraps around the poles.
4. Bring the rope up between the spars and make two tight turns parallel to the poles.
5. Make a clove hitch around one of the poles.
6. Ensure the lashing is tight and secure.
7. Sheer lashing opened to create a pair of sheer legs or an A-frame.

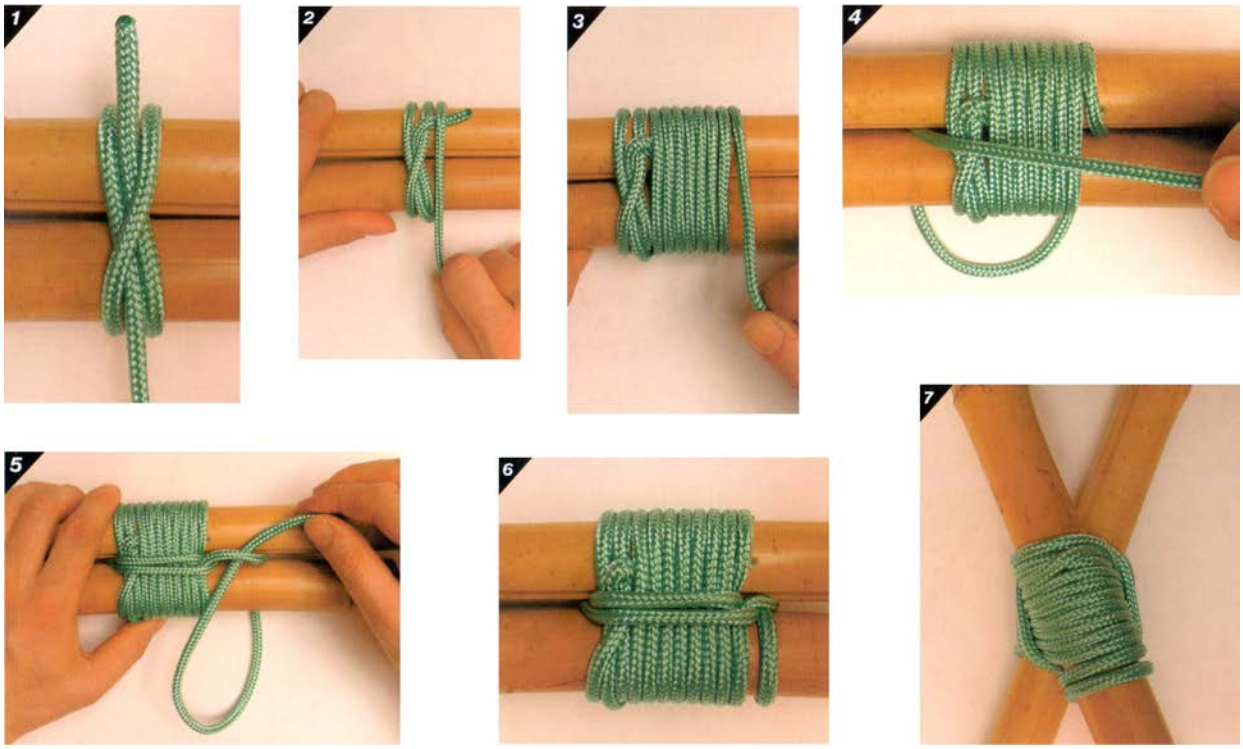

Pawson, D., Pocket Guide to Knots & Splices, Chartwell Books, Inc. (pp. 184-185)

Figure A-1 Sheer Lashing

Unofficial convenience copy of A-CR-CCP-702/PF-001, cached 2026-11-08 from https://app.cadets.gc.ca/cadet-publications/A-CR-CCP-702-PF-001/A-CR-CCP-702-PF-001.pdf.
Verify against the official publication.

SQUARE LASHING

Procedure

1. With the vertical pole on top of the horizontal pole, make a clove hitch. The vertical pole runs up and down, and the horizontal pole left to right.

2. Bring all of the rope around and behind the horizontal pole.

3. Tightly bring the rope over the vertical pole and back behind the horizontal pole, back to the clove hitch.

4. Continue to make three complete turns around the poles, pulling the rope tight after each turn.

5. After passing the clove hitch, tightly bring the rope to the horizontal pole from behind and start wrapping around the two poles. These wraps are called frapping turns.

6. Make two complete sets of frapping turns.

7. Make a clove hitch around the horizontal pole.

8. Ensure lashing is tight and secure.

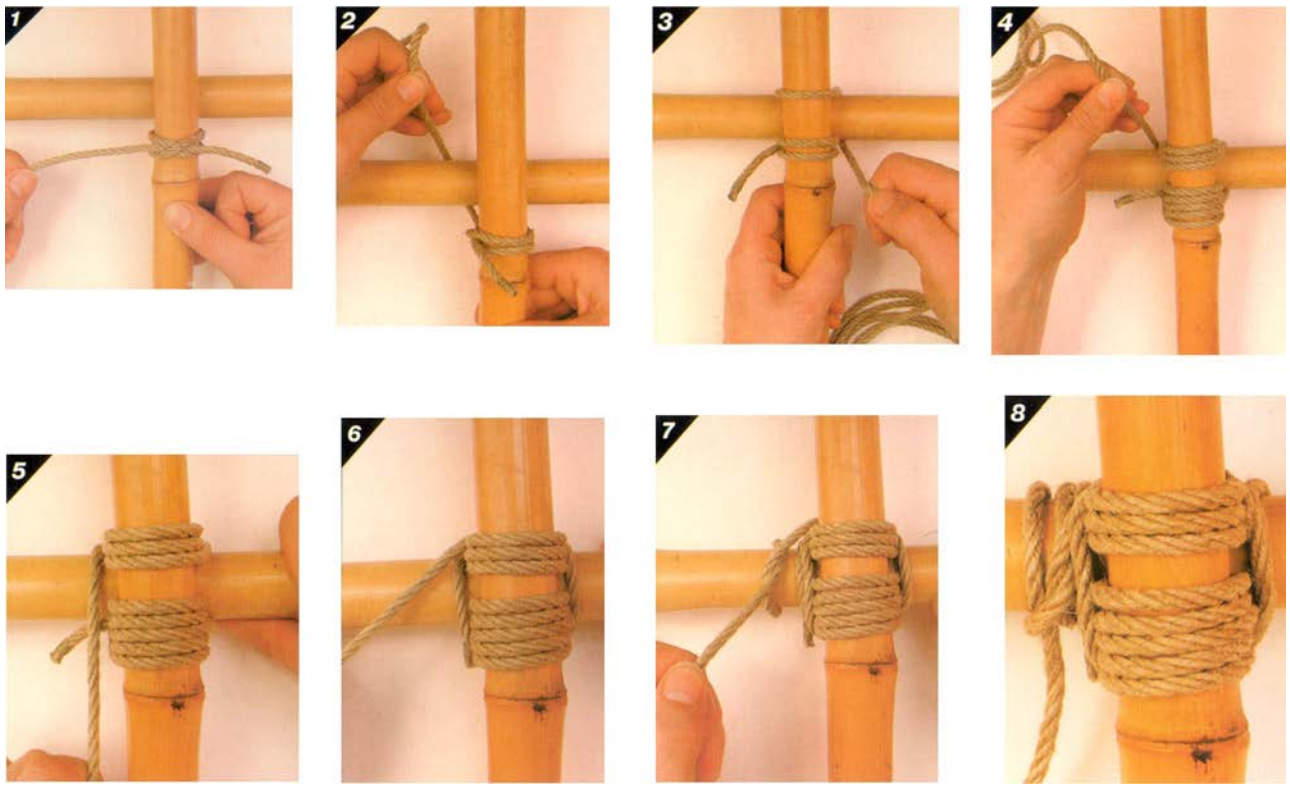

Pawson, D., Pocket Guide to Knots & Splices, Chartwell Books, Inc. (pp. 180-181)

Figure A-2 Square Lashing

Unofficial convenience copy of A-CR-CCP-702/PF-001, cached 2026-11-08 from https://app.cadets.gc.ca/cadet-publications/A-CR-CCP-702-PF-001/A-CR-CCP-702-PF-001.pdf.
Verify against the official publication.

DIAGONAL LASHING

Procedure

1. Make a timber hitch around the two crossed poles.
2. Make a turn around the two crossed poles, pulling the timber hitch tight.
3. Make three more complete turns in the same direction, pulling them tight.
4. Change direction by coming around one of the poles.
5. Make four full turns around the two poles at right angles to the original turns, pulling them tight.
6. Take the working end of the rope around one of the poles, making a frapping turn.
7. Make two complete frapping turns.
8. Make a clove hitch.
9. Ensure lashing is tight and secure.

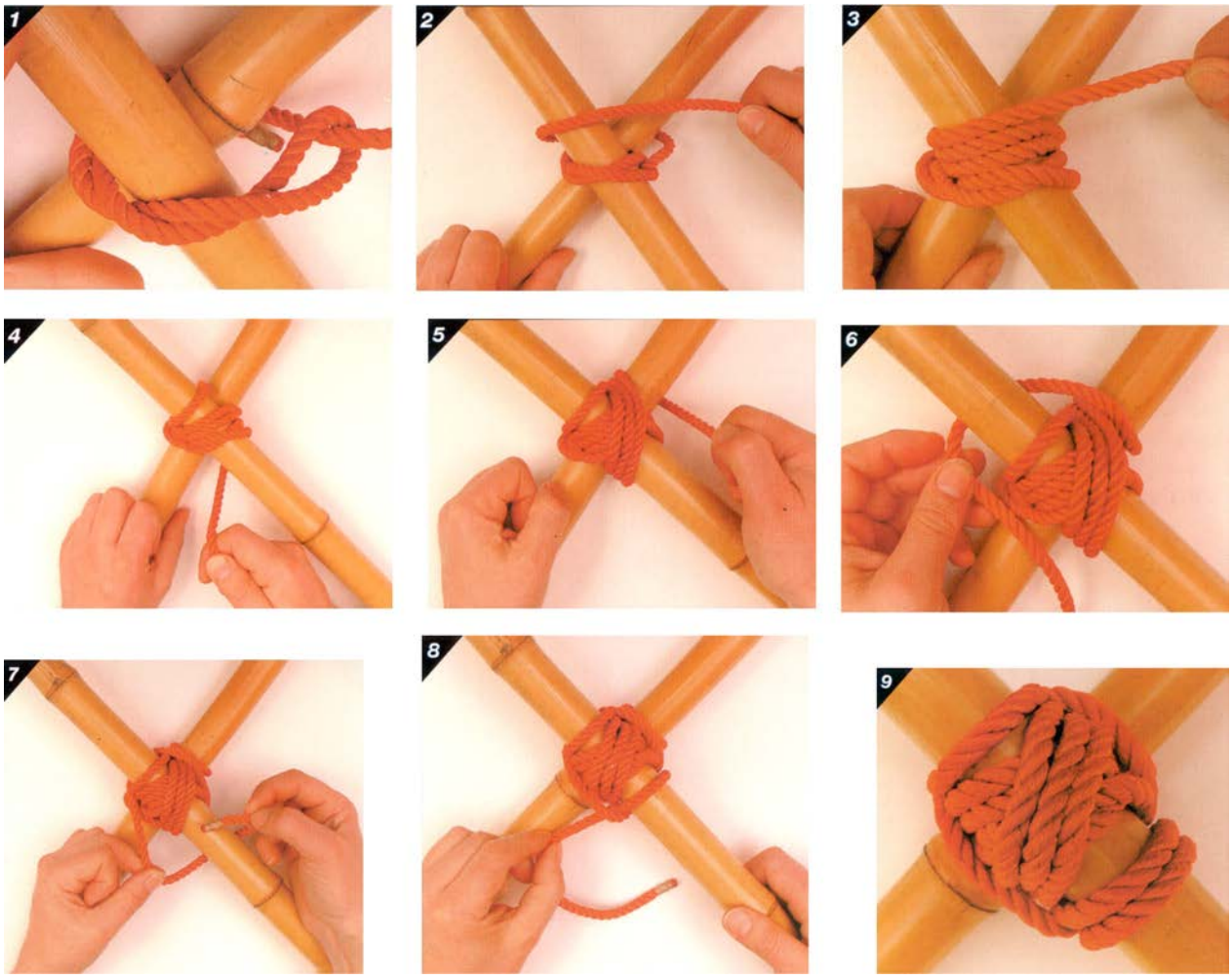

Pawson, D., Pocket Guide to Knots & Splices, Chartwell Books, Inc. (pp. 182-183)

Figure A-3 Diagonal Lashing

Unofficial convenience copy of A-CR-CCP-702/PF-001, cached 2026-11-08 from https://app.cadets.gc.ca/cadet-publications/A-CR-CCP-702-PF-001/A-CR-CCP-702-PF-001.pdf.
Verify against the official publication.

FIGURE-OF-EIGHT LASHING

Procedure

1. Make a clove hitch around one of the outside poles. Bring the rope under and over the other poles.
2. Go around the pole furthest away from the start and weave the rope back over and under.
3. Continue to weave the rope under and over eight times. Bring the rope up in between any two poles.
4. Pull the rope parallel to the poles and put in two frapping turns.
5. Make three frapping turns in between the remaining poles.
6. Make a clove hitch around the pole that already has a clove hitch (from the beginning) at the opposite end.
7. Open up the poles.

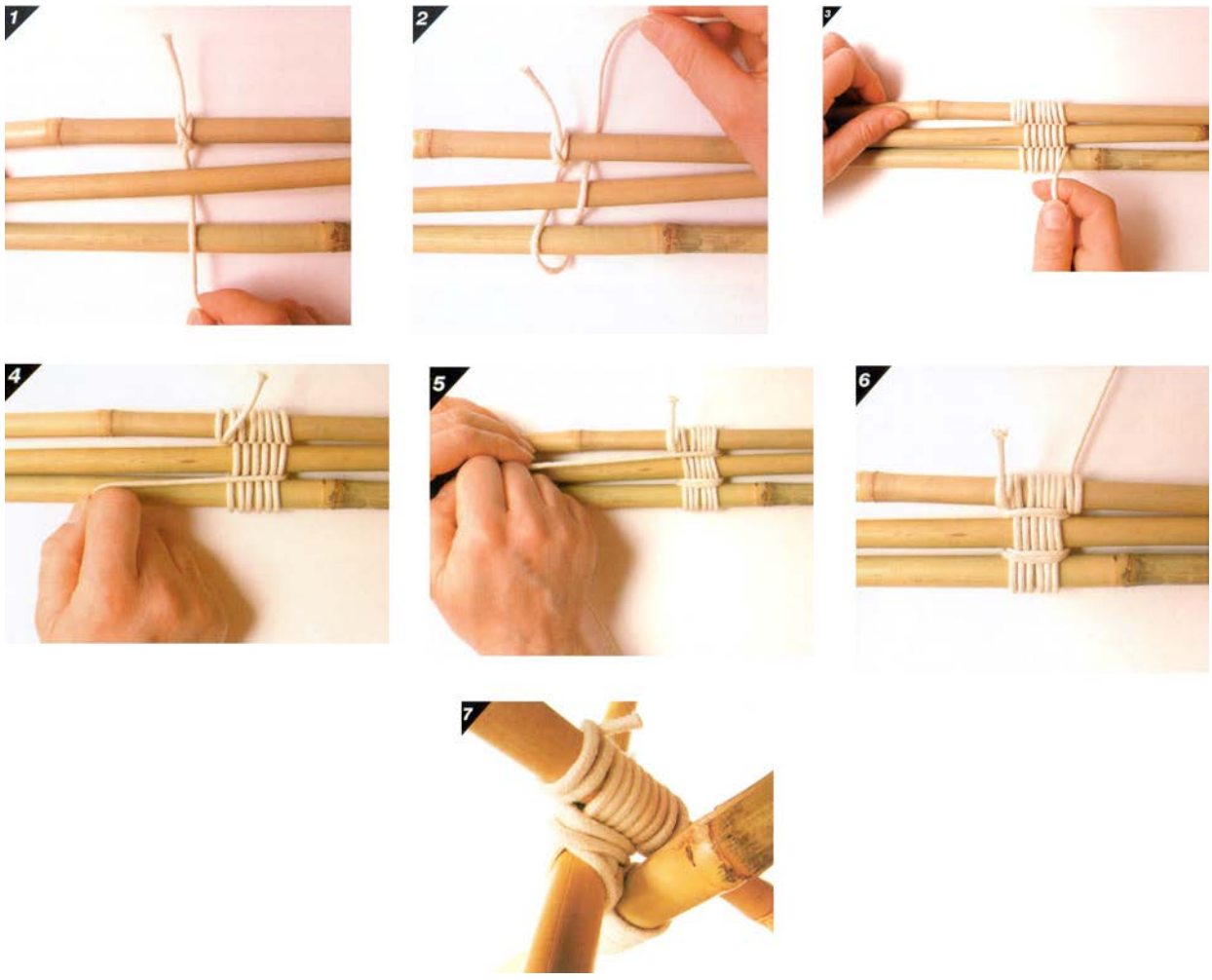

Pawson, D., Pocket Guide to Knots & Splices, Chartwell Books, Inc. (pp. 187-188)

Figure A-4 Figure-of-eight Lashing

Unofficial convenience copy of A-CR-CCP-702/PF-001, cached 2026-11-08 from https://app.cadets.gc.ca/cadet-publications/A-CR-CCP-702-PF-001/A-CR-CCP-702-PF-001.pdf.
Verify against the official publication.

FIELD AMENITIES

BENCH WITH BACK REST

Instructions

1. Find a large area.
2. Obtain the following resources:
   - a large quantity of rope;
   - eight round pieces of wood/logs approximately two metres each;
   - two round pieces of wood/logs approximately one metre each; and
   - two round pieces of wood/logs approximately one half metre each.
3. Begin by constructing the sitting portion of the bench by attaching four long pieces of wood to the one metre pieces, using square lashings.
4. Drive the two long and two short pieces of wood that will be used as the legs of the bench into the ground.
5. Lash the sitting portion onto the legs, using square lashings.
6. Construct the back rest using square lashings and attach it to the long legs in the ground.

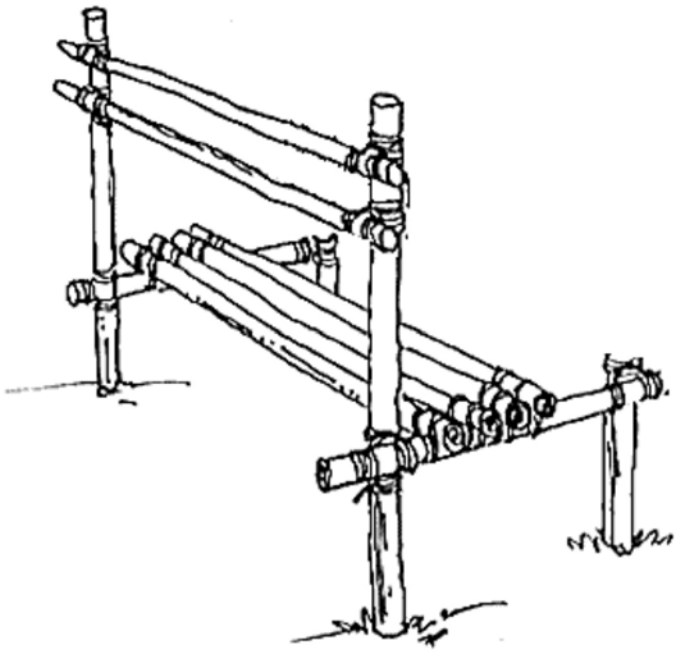

BENCH WITH BACK REST

PioneeringProjects.org, by A. Miller, 2004, Projects, Copyright 2001 from PioneeringProjects.org. Retrieved 20 February 2007, from http://www.pioneeringprojects.org/projects/index.htm

Figure B-1 Bench With Back Rest

Unofficial convenience copy of A-CR-CCP-702/PF-001, cached 2026-11-08 from https://app.cadets.gc.ca/cadet-publications/A-CR-CCP-702-PF-001/A-CR-CCP-702-PF-001.pdf.
Verify against the official publication.

CAMP TABLE

Instructions

1. Find a large area.
2. Obtain the following resources:
   - a large quantity of rope,
   - four round pieces of wood/logs approximately three metres each;
   - six round pieces of wood/logs approximately two metres each;
   - two round pieces of wood/logs approximately one metre and a half each; and
   - fourteen round pieces of wood/logs approximately one half metre each.
3. Construct a figure-of-eight lashing around the four long pieces of wood, to make an A-frame.
4. Construct the table top, using square lashings.
5. Attach the table top portion to the long poles, using square lashings.
6. Make the sitting portion using square lashings and attach it to the long poles using square lashings.

The best lashing to use for the peak of the camp table is the figure-of-eight lashing. It must be tied using the indicated steps; however, there will be four poles used instead of three.

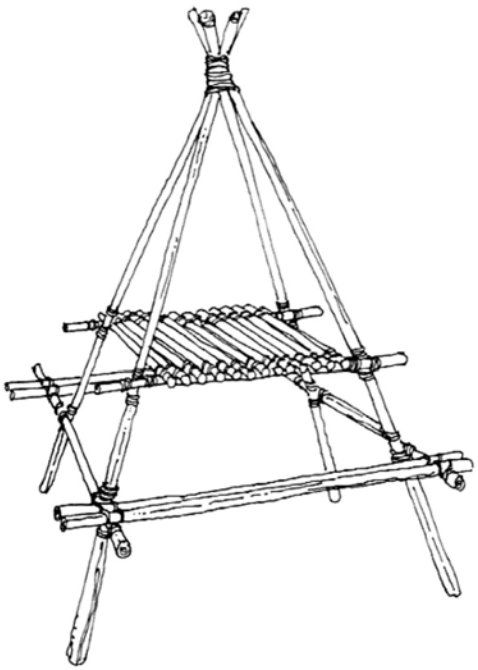

CAMP TABLE

PioneeringProjects.org, by A. Miller, 2004, Projects, Copyright 2001 from PioneeringProjects.org. Retrieved 20 February 2007, from http://www.pioneeringprojects.org/projects/index.htm

Figure B-2 Camp Table

Unofficial convenience copy of A-CR-CCP-702/PF-001, cached 2026-11-08 from https://app.cadets.gc.ca/cadet-publications/A-CR-CCP-702-PF-001/A-CR-CCP-702-PF-001.pdf.
Verify against the official publication.

BULLETIN BOARD

Instructions

1. Find a large area.
2. Obtain the following resources:
   - a large quantity of rope;
   - two thick round pieces of wood/logs approximately two metres each;
   - two round pieces of wood/logs approximately two metres each; and
   - twelve round pieces of wood/logs approximately one metre each.
3. Construct the canopy portion of the bulletin board using square lashings.
4. Tie the ends of the thin two metre wood to the thick two metre wood with a sheer lashing.
5. Use diagonal lashings to fasten the thin two metre wood to the canopy.
6. Square lash the end of the canopy to the thick wood.
7. Drive the two thick round pieces of wood into the ground.

A flat piece of wood or a piece of bristol board can be used for the background of the bulletin board.

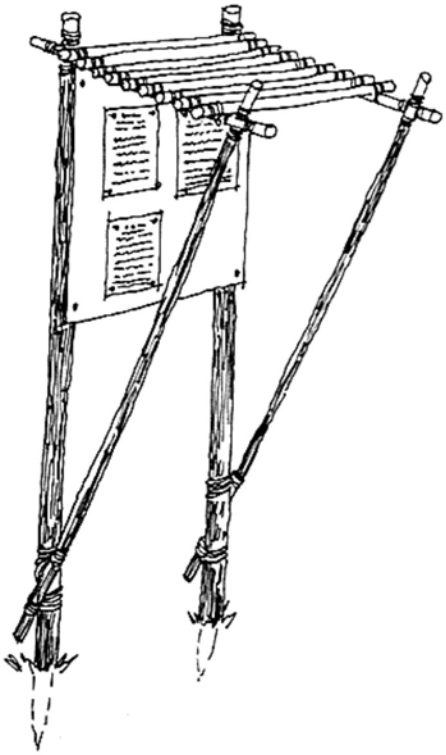

BULLETIN BOARD

PioneeringProjects.org, by A. Miller, 2004, Projects, Copyright 2001 from PioneeringProjects.org. Retrieved 20 February 2007, from http://www.pioneeringprojects.org/projects/index.htm

Figure B-3 Bulletin Board

Unofficial convenience copy of A-CR-CCP-702/PF-001, cached 2026-11-08 from https://app.cadets.gc.ca/cadet-publications/A-CR-CCP-702-PF-001/A-CR-CCP-702-PF-001.pdf.
Verify against the official publication.

PODIUM

Instructions

1. Find a large area.
2. Obtain the following resources:
   - a large quantity of rope;
   - twelve to fifteen round pieces of wood/logs approximately one half metre each; and
   - eight round pieces of wood/logs approximately one and a half metres each.
3. Construct the table portion of the podium using square lashings.
4. Construct the base of the podium using square lashings. The X portion will provide needed support and requires diagonal lashings.
5. Square lash the table portion of the podium to the base.

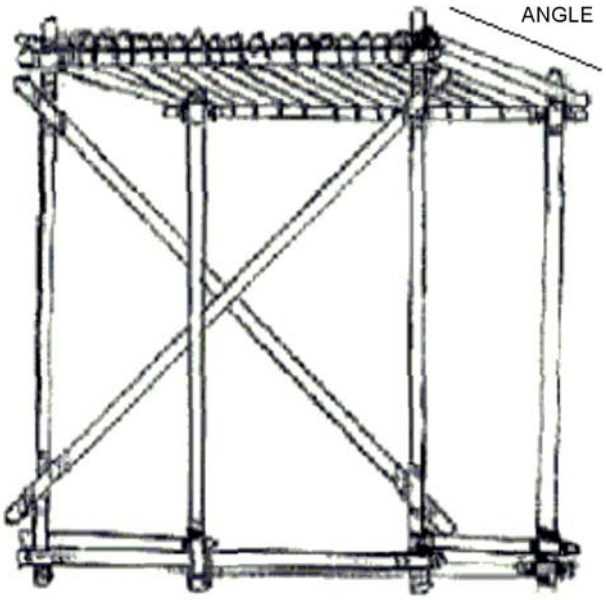

PODIUM

PioneeringProjects.org, by A. Miller, 2004, Projects, Copyright 2001 from PioneeringProjects.org. Retrieved 20 February 2007, from http://www.pioneeringprojects.org/projects/index.htm

Figure B-4 Podium

Unofficial convenience copy of A-CR-CCP-702/PF-001, cached 2026-11-08 from https://app.cadets.gc.ca/cadet-publications/A-CR-CCP-702-PF-001/A-CR-CCP-702-PF-001.pdf.
Verify against the official publication.