COMMON TRAINING

INSTRUCTIONAL GUIDE

SECTION 2

EO C206.01 – PRACTICE HOLDING TECHNIQUES

Total Time: 30 min

PREPARATION

PRE-LESSON INSTRUCTIONS

Resources needed for the delivery of this lesson are listed in the lesson specification located in A-CR-CCP-702/PG-001, Chapter 4. Specific uses for said resources are identified throughout the Instructional Guide within the TP for which they are required.

Review the lesson content and become familiar with the material prior to delivering the lesson.

For comfort during this class, it is recommended that cadets be dressed in PT gear.

Ensure all cadet air rifle slings are properly assembled (except one for demonstration).

PRE-LESSON ASSIGNMENT

N/A.

APPROACH

Demonstration was chosen for TP1 and TP2 as it allows the instructor to explain and demonstrate the holding techniques that the cadet is expected to acquire.

Performance was chosen for TP3 as it provides an opportunity for the cadets to practice holding techniques under supervision.

INTRODUCTION

REVIEW

The review for this lesson is from EO M106.03 (Apply Basic Marksmanship Techniques), specifically adopting the prone position.



Have an assistant instructor lie down on a mat and assume the prone position without the cadet air rifle sling. Allow the cadets two minutes to identify and/or correct aspects of the position.

Unofficial convenience copy of A-CR-CCP-702/PF-001, cached 2026-11-08 from https://app.cadets.gc.ca/cadet-publications/A-CR-CCP-702-PF-001/A-CR-CCP-702-PF-001.pdf.
Verify against the official publication.

OBJECTIVES

By the end of this lesson the cadet shall have practiced holding techniques.

IMPORTANCE

It is important for cadets to practice holding techniques using the cadet air rifle sling, as it will enhance the cadets' marksmanship skills through added stability of the firing position.

Teaching point 1 **Explain and Demonstrate Adopting the Prone Position**

Time: 5 min Method: Demonstration



An assistant instructor may be used to demonstrate as the instructor explains the prone position.

THE PRONE POSITION

The first principle of marksmanship is to find a comfortable firing position. The prone position is the most stable firing position in which the cadet air rifle is supported by the body structure. The prone position requires little movement and muscular tension while holding the cadet air rifle, so that:

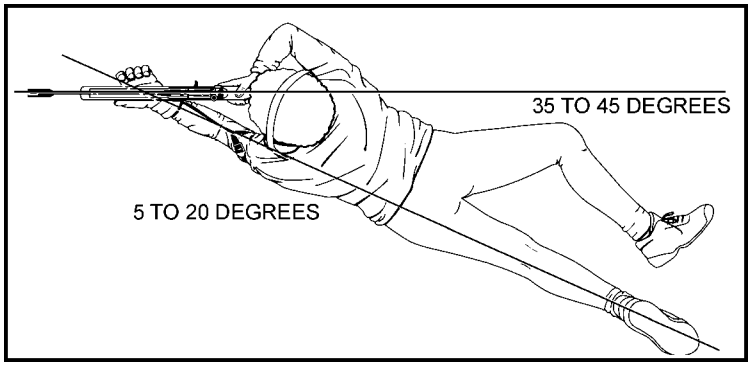

A-CR-CCP-177/PT-001 (p. 1-5-3)

Figure 1 Prone Position

- the bodyweight is equally distributed;
- the position is consistent throughout the relay;
- the body forms a 5 to 20 degree angle to the line of sight with the target;
- the body and spine are straight;
- the left leg is parallel with the spine;
- the right foot is straight out or turned to the right;
- the left foot is straight behind on the toe or pointed to the right; and
- the right knee is brought up so the thigh forms a 30 to 45 degree angle with the left leg.

Unofficial convenience copy of A-CR-CCP-702/PF-001, cached 2026-11-08 from https://app.cadets.gc.ca/cadet-publications/A-CR-CCP-702-PF-001/A-CR-CCP-702-PF-001.pdf.
Verify against the official publication.

By bending the right knee, stability is improved. This causes the body to roll slightly, raising the chest off the ground to improve breathing and to minimize body movement caused by a normal heartbeat.

CONFIRMATION OF TEACHING POINT 1

The cadets' participation in the holding technique activity in TP3 will serve as the confirmation of this TP.

Teaching point 2 **Explain and Demonstrate Holding Techniques Using the Cadet Air Rifle Sling**

Time: 10 min Method: Demonstration

The cadet air rifle sling helps the cadet maintain a comfortable and stable position, improving the ability to hold the cadet air rifle. It also allows the right hand to be free to load the air rifle while the rifle remains in position.

Arrange the cadets so they can all hear the explanation and see the demonstration.

ASSEMBLING THE SLING

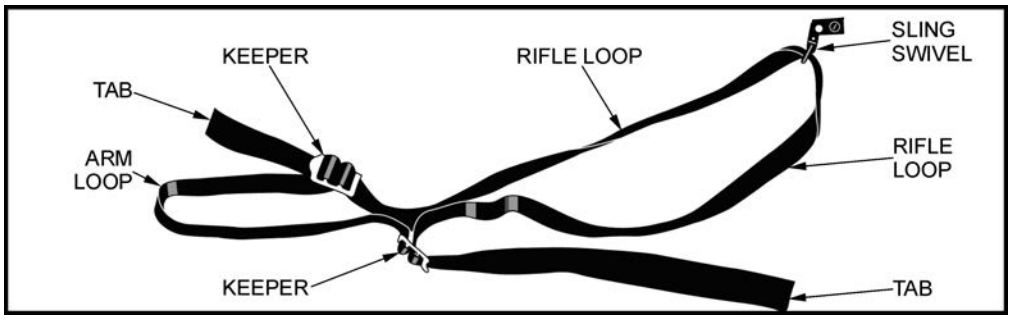

A-CR-CCP-121/PT-001, Royal Canadian Army Cadet Reference Book (p. 6-17)

Figure 2 Cadet Air Rifle Sling

The cadet air rifle sling is assembled in the following sequence:

1. Hold the sling parallel to the ground with the short section in the left hand, ensuring the rounded tip of the keeper is pointing to the left.

2. Take the tab of the short section, loop it through the middle slot of the keeper and then back down through the front slot nearest to the rounded tip. The short section will now form the arm loop.

3. Turn the sling over and slide the sling swivel onto the long section. Ensure the sling swivel hangs downwards, as it will later attach to the rifle.

4. Loop the tab of the long section up through the middle slot of the keeper and then back through the rear slot nearest to the rounded tip. The long section will now form the rifle loop.

Unofficial convenience copy of A-CR-CCP-702/PF-001, cached 2026-11-08 from https://app.cadets.gc.ca/cadet-publications/A-CR-CCP-702-PF-001/A-CR-CCP-702-PF-001.pdf.
Verify against the official publication.



An assistant instructor can be used to demonstrate as the instructor explains wearing, adjusting and attaching the cadet air rifle sling.

POSITIONING THE SLING ON THE ARM

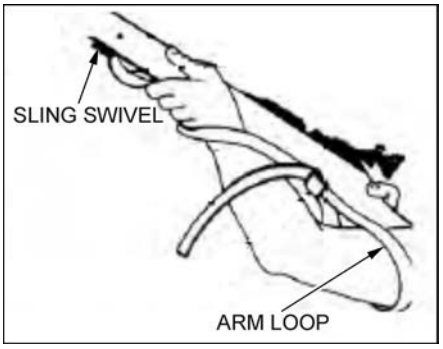

Daisy Outdoor Products, Operational Manual – AVANTI Legend EX Model 853C, Daisy Outdoor Products (p. 7)

Figure 3 Positioning Sling

The sling arm loop should be positioned on the upper part of the arm, above the bicep muscle near the shoulder. The sling can be held in place by the rubber pad on a shooting jacket. When a shooting jacket is not worn, the sling can be kept in place using a safety pin. This will prevent the sling from slipping down the arm while in the prone position.

ADJUSTING THE ARM LOOP

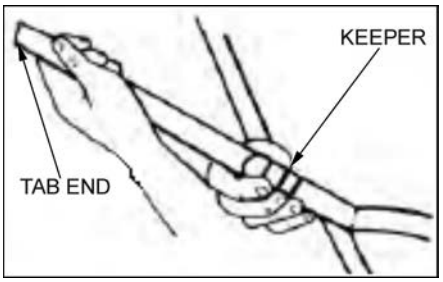

Daisy Outdoor Products, Operational Manual – AVANTI Legend EX Model 853C, Daisy Outdoor Products (p. 8)

Figure 4 Adjusting Arm Loop

To adjust the arm loop, pull the tab away from the keeper. If the sling is too loose, it will not fully support the cadet air rifle and it will have to be kept in place using muscles. If the sling is too tight, it will restrict the blood flow to the arm and can cause discomfort, numbness, or a more pronounced feel of the body's pulse. Therefore, the sling must be comfortable without pinching the arm, while providing maximum support of the cadet air rifle.

Unofficial convenience copy of A-CR-CCP-702/PF-001, cached 2026-11-08 from https://app.cadets.gc.ca/cadet-publications/A-CR-CCP-702-PF-001/A-CR-CCP-702-PF-001.pdf.
Verify against the official publication.

ATTACHING THE SLING TO THE CADET AIR RIFLE

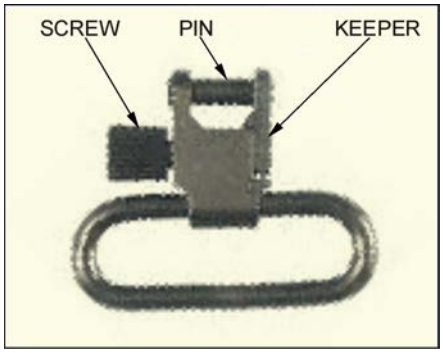

D Cdts 3, 2007, Ottawa, ON: Department of National Defence

Figure 5 Sling Swivel

To attach the sling to the cadet air rifle, simply:

1. open the keeper on the sling swivel by pressing on the screw;
2. insert the swivel pin into the hole of the sling swivel on the fore end of the rifle; and
3. screw the keeper over the pin to lock the swivel in place.

ADJUSTING THE RIFLE LOOP

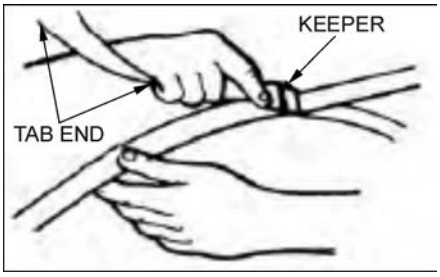

Daisy Outdoor Products, Operational Manual – AVANTI Legend EX Model 853C, Daisy Outdoor Products (p. 8)

Figure 6 Adjusting Rifle Loop

To adjust the rifle loop, pull the tab away from the keeper. The tension of the sling should allow the forearm to be in its proper position. If the sling is too loose, it will not provide maximum support of the cadet air rifle. If the sling is too tight, it could cause discomfort and affect the cadet's position.

CONFIRMATION OF TEACHING POINT 2

The cadets' participation in the holding technique activity in TP3 will serve as the confirmation of this TP.

Unofficial convenience copy of A-CR-CCP-702/PF-001, cached 2026-11-08 from https://app.cadets.gc.ca/cadet-publications/A-CR-CCP-702-PF-001/A-CR-CCP-702-PF-001.pdf.
Verify against the official publication.

Teaching point 3 **Conduct a Holding Technique Activity**

Time: 10 min Method: Performance

ACTIVITY

OBJECTIVE

The objective of this activity is to have cadets adopt the prone position, positioning the sling on the arm, adjusting the arm loop, attaching the sling to the air rifle, and adjusting the rifle loop.

RESOURCES

- Cadet air rifle (one per firing lane).
- Cadet air rifle sling (one per air rifle).
- Shooting mat (one per firing lane).

ACTIVITY LAYOUT

An air rifle range constructed IAW A-CR-CCP-177/PT-001, Chapter 1, Section 8. If a range is not available, set up the training area to have a defined mock firing point. The assistant instructor shall be used to confirm the cadet's position.

ACTIVITY INSTRUCTIONS

1. Divide cadets into equal groups according to the number of cadet air rifles.
2. Have each group of cadets take turns lying down on mats and assume the prone position.
3. With assistance, allow the cadets to practice the prone position as taught.
4. Have cadets position the sling on the arm and adjust the arm loop.
5. Have cadets attach the sling to the air rifle and put the cadet air rifle into the shoulder.
6. Have cadets adjust the rifle loop of the sling.
7. Have cadets adjust their prone position.
8. Inspect each cadet for proper placement of the sling on the arm and tension of the sling loops.
9. Repeat steps as required, within the allotted time.

SAFETY

Ensure that the cadet air rifles are pointed in a safe direction at all times. Cadets will treat air rifles as though they are loaded.

CONFIRMATION OF TEACHING POINT 3

The cadets' participation in the holding technique activity will serve as the confirmation of this TP.

Unofficial convenience copy of A-CR-CCP-702/PF-001, cached 2026-11-08 from https://app.cadets.gc.ca/cadet-publications/A-CR-CCP-702-PF-001/A-CR-CCP-702-PF-001.pdf.
Verify against the official publication.

END OF LESSON CONFIRMATION

The cadets' participation in the holding technique activity in TP3 will serve as the confirmation of this lesson.

CONCLUSION

HOMEWORK/READING/PRACTICE

N/A.

METHOD OF EVALUATION

N/A.

CLOSING STATEMENT

The prone position and the cadet air rifle sling are essential to improving marksmanship techniques. With practice using the sling in the prone position, cadets can improve their technique and their marksmanship score.

INSTRUCTOR NOTES/REMARKS

Instructions may be modified for left-handed cadets (e.g., switching left hand/foot when instructions call for right hand/foot).

This EO is intended to enhance and further develop techniques taught in EO M106.03 (Apply Basic Marksmanship Techniques).

REFERENCES

A0-027 A-CR-CCP-177/PT-001 D Cdts 3. (2001). *Canadian Cadet Movement: Cadet Marksmanship Program Reference Manual.* Ottawa, ON: Department of National Defence.

Unofficial convenience copy of A-CR-CCP-702/PF-001, cached 2026-11-08 from https://app.cadets.gc.ca/cadet-publications/A-CR-CCP-702-PF-001/A-CR-CCP-702-PF-001.pdf.
Verify against the official publication.

THIS PAGE INTENTIONALLY LEFT BLANK

Unofficial convenience copy of A-CR-CCP-702/PF-001, cached 2026-11-08 from https://app.cadets.gc.ca/cadet-publications/A-CR-CCP-702-PF-001/A-CR-CCP-702-PF-001.pdf.
Verify against the official publication.