ROYAL CANADIAN AIR CADETS

PROFICIENCY LEVEL TWO

INSTRUCTIONAL GUIDE

SECTION 3

EO M232.03 – EXPLAIN THE CYCLES OF A FOUR-STROKE PISTON-POWERED ENGINE

Total Time: 60 min

PREPARATION

PRE-LESSON INSTRUCTIONS

Resources needed for the delivery of this lesson are listed in the lesson specification located in A-CR-CCP-802/PG-001, Chapter 4. Specific uses for said resources are identified throughout the Instructional Guide within the TP for which they are required.

Review the lesson content and become familiar with the material prior to delivering the lesson.

Create slides or photocopy handouts of Figures A-1 to A-6 for each cadet.

Photocopy handouts of Figure B-1 for each cadet.

PRE-LESSON ASSIGNMENT

N/A.

APPROACH

An interactive lecture was chosen for TP1 to TP4 to introduce the cycles of a four-stroke piston-powered engine and give an overview of them.

An in-class activity was chosen for TP5 as it is an interactive way to provoke thought and stimulate an interest among the cadets.

INTRODUCTION

REVIEW

N/A.

OBJECTIVES

By the end of this lesson the cadet shall be expected to explain the cycles of a four-stroke piston-powered engine.

IMPORTANCE

It is important for cadets to learn about the cycles of a four-stroke piston-powered engine so that they will understand the process by which an aircraft operates.

Unofficial convenience copy of A-CR-CCP-802/PF-001, cached 2026-11-08 from https://app.cadets.gc.ca/cadet-publications/A-CR-CCP-802-PF-001/A-CR-CCP-802-PF-001.pdf.
Verify against the official publication.

Teaching point 1 **Explain the Purposes of the Strokes of a Four-stroke Piston**

Time: 15 min Method: Interactive Lecture

CYCLES OF A FOUR-STROKE PISTON-POWERED ENGINE

The parts of an engine work together in a cycle to turn the aircraft's propeller. In most aircraft engines, this cycle has four distinct stages called strokes:

- the intake stroke draws fuel and air into the cylinder;
- the compression stroke forces the fuel and air into the combustion chamber;
- the power stroke transmits the energy of the exploding fuel to the crankshaft; and
- the exhaust stroke cleans the cylinder of exhaust fumes and prepares it for the next intake stroke.



The piston travels four strokes (two up and two down) to complete one cycle. During this operation, the crankshaft goes through two complete revolutions.

The Intake (Induction) Stroke



Show the cadets a slide or distribute the handout of the intake stroke in Figure A-1.

During the first (intake) stroke, the intake valve opens to let the gasoline and air mixture into the cylinder and the piston moves down to draw the mixture into the cylinder. The exhaust valve is closed during this stroke.

The Compression Stroke



Show the cadets a slide or distribute the handout of the compression stroke in Figure A-2.

In the second (compression) stroke, both valves are closed while the piston moves up to compress the mixture.

The Power (Combustion) Stroke



Show the cadets a slide or distribute the handout of the power stroke in Figure A-3.

In the third (power) stroke, both valves remain closed while the spark plug ignites the gas, which burns, expands and forces the piston down again.

Unofficial convenience copy of A-CR-CCP-802/PF-001, cached 2026-11-08 from https://app.cadets.gc.ca/cadet-publications/A-CR-CCP-802-PF-001/A-CR-CCP-802-PF-001.pdf.
Verify against the official publication.

The Exhaust Stroke



Show the cadets a slide or distribute the handout of the exhaust stroke in Figure A-4.

In the fourth (exhaust) stroke, the exhaust valve is open to let the burnt gases out while the intake valve is closed. The piston moves up again to force the burned gases out through the open exhaust valve.



Show the cadets a slide or distribute the handout of the four strokes of a piston-powered engine in Figure A-5.

After the exhaust stroke, the whole process repeats itself thousands of times per minute, causing the crankshaft to turn the propeller on the aircraft.

CONFIRMATION OF TEACHING POINT 1

QUESTIONS

Q1. What must happen between the power stroke and the exhaust stroke?

Q2. What must happen before the power stroke can take place?

Q3. How many complete revolutions of the crankshaft are in four strokes?

ANTICIPATED ANSWERS

A1. Between the power stroke and the exhaust stroke, the exhaust valve must open.

A2. Fuel and air must be taken in, all valves must close and the spark plug must ignite.

A3. The crankshaft goes through two complete revolutions in four strokes (two down and two up).

Teaching point 2 **Identify and Explain the Operation of Valves and Camshafts**

Time: 5 min Method: Interactive Lecture

Other important components of piston-powered four-stroke internal combustion engines are the cam systems, which operate the valves.



Show the cadets a slide or distribute the handout of the cam and valve mechanism in Figure A-6.

Since the crankshaft rotates in time with the piston movements, its rotation is used to provide signals to the valves, telling them when to open. The usual method is to arrange for the crankshaft to turn a secondary shaft (camshaft) that has lobes, or cams, raised on its surface. The shape of the cam is such that it mechanically

Unofficial convenience copy of A-CR-CCP-802/PF-001, cached 2026-11-08 from https://app.cadets.gc.ca/cadet-publications/A-CR-CCP-802-PF-001/A-CR-CCP-802-PF-001.pdf.
Verify against the official publication.

pushes its associated valve open – there are many ways to mechanically arrange this – just the right amount at just the right time.



The crankshaft provides the timing information to the valves by using cams on a camshaft to push the valves open. The camshaft is usually connected to the crankshaft through gears.

CONFIRMATION OF TEACHING POINT 2

QUESTIONS

Q1. From what engine component is the valve timing first taken?

Q2. What pushes the valve open the right amount at the right time?

Q3. How does the timing information usually get from the crankshaft to the cam?

ANTICIPATED ANSWERS

A1. The valve timing is taken first from the crankshaft.

A2. A cam on a rotating camshaft pushes the valve open the right amount at the right time.

A3. The crankshaft provides the timing information to the valves by using cams on a camshaft to push the valves open. The camshaft is usually connected to the crankshaft through gears.

Teaching point 3 **Explain the Timing of Electrical Ignition Spark Distribution**

Time: 10 min Method: Interactive Lecture

Efficient, complete burning takes time. Even though an explosive detonation like that found in a piston-powered engine cylinder seems to happen in an instant, time is actually required. The engine turns very fast, thousands of revolutions per minute, so time is short. To ensure that the fuel is burned completely and that all energy is recovered from the fuel, the spark that sets off the detonation must be delivered while the piston is still rising on the compression stroke. If the spark arrives during the power stroke there is not enough time to burn the fuel completely and unburned fuel is exhausted. This would be an inefficient waste of fuel and it would contribute to environmental pollution in the form of blue smoke. Therefore, the timing of the spark plug's electrical signal must be exact.



Each spark plug of each cylinder must get its electrical signal as the piston is rising, before the end of the compression stroke.

The timing for spark distribution also originates from the crankshaft through a system of gears, which provide coarse, or rough, timing. The need for precision timing is so great that a technician usually measures spark timing with electronic tools to ensure precision during engine tune-ups.

CONFIRMATION OF TEACHING POINT 3

QUESTIONS

Q1. Why is the spark delivered to the cylinder early, during the compression stroke?

Unofficial convenience copy of A-CR-CCP-802/PF-001, cached 2026-11-08 from https://app.cadets.gc.ca/cadet-publications/A-CR-CCP-802-PF-001/A-CR-CCP-802-PF-001.pdf.
Verify against the official publication.

Q2. Where is the timing of the spark taken from?

Q3. How many revolutions per minute does a working engine complete?

ANTICIPATED ANSWERS

A1. The spark is delivered early because complete burning of the fuel takes time.

A2. Timing of the spark comes from the crankshaft.

A3. A working engine completes thousands of revolutions per minute.

Teaching point 4 **Explain That all Engine Operations Must Proceed in Order**

Time: 10 min Method: Interactive Lecture

Engine operations must proceed precisely in order. Often, more than one operation must happen simultaneously. For example, the spark must be delivered to the cylinder while both valves are closed. A spark delivered to a charged cylinder when a valve is open results in a “backfire”. Power is lost and a valve will be burned – or perhaps even broken.



Show the cadets a slide or distribute the handout of the four strokes of a four-stroke piston-powered engine in Figure A-5.

The engine operation must proceed as follows:

- Fuel and air mixture must be available for all cylinders, all the time, in a multi-cylinder engine.
- The intake stroke of the piston must take place with the intake valve open and the exhaust valve closed.
- The compression stroke of the piston must take place with both valves closed.
- Electrical signals must be delivered to spark plugs just before the piston completes the power stroke, when both valves are closed.
- The power stroke of the piston must take place with both valves closed.
- The exhaust stroke of the piston must take place with the exhaust valve open and the intake valve closed.
- The camshaft must push each valve open and closed at the right times.



For smooth operation, the valve and spark timing must be precise for all the cylinders.



Distribute copies of Figure B-1 and have the cadets fill in the names of the strokes pictured.

Unofficial convenience copy of A-CR-CCP-802/PF-001, cached 2026-11-08 from https://app.cadets.gc.ca/cadet-publications/A-CR-CCP-802-PF-001/A-CR-CCP-802-PF-001.pdf.
Verify against the official publication.

CONFIRMATION OF TEACHING POINT 4

QUESTIONS

Q1. On which strokes are both valves closed?

Q2. On which strokes is one valve open?

Q3. What causes an engine to backfire?

ANTICIPATED ANSWERS

A1. Both valves are closed on the compression stroke and on the power stroke.

A2. On the intake stroke the intake valve is open; on the exhaust stroke the exhaust valve is open.

A3. A backfire can be caused by a spark delivered to a charged cylinder when a valve is open.

Teaching point 5 **Enact the Performance of the Four-stroke Piston-powered Engine**

Time: 15 min Method: In-Class Activity

ACTIVITY

OBJECTIVE

The objective of this activity is to have the cadets apply their knowledge of the cycles of a four-stroke piston-powered engine by enacting the cycles in order.

RESOURCES

N/A.

ACTIVITY LAYOUT

N/A.

ACTIVITY INSTRUCTIONS

Organize the cadets into teams of six, consisting of:

- One cadet acting as the piston,
- One cadet acting as the crankshaft,
- One cadet acting as the intake valve,
- One cadet acting as the exhaust valve,
- One cadet acting as the camshaft, and
- One cadet acting as the spark plug.

Have the cadets enact the cycles of a four-stroke piston-powered engine in the following way:

1. Have five cadets form a standing circle around the sitting piston.

Unofficial convenience copy of A-CR-CCP-802/PF-001, cached 2026-11-08 from https://app.cadets.gc.ca/cadet-publications/A-CR-CCP-802-PF-001/A-CR-CCP-802-PF-001.pdf.
Verify against the official publication.

2. As the crankshaft calls the stroke in sequence (intake, compression, power and exhaust), the piston lowers and raises both hands accordingly.

3. The camshaft points at each valve, while that valve is supposed to be open.

4. Each valve opens their arms wide when the valve is open and places arms at their sides when the valve is closed.

5. The spark plug claps hands over the piston's head just before the end of the compression stroke (before the piston's hands are completely raised), when both valves are closed.

6. The entire sequence is repeated as fast as possible until a mistake is made.

SAFETY

N/A.

CONFIRMATION OF TEACHING POINT 5

The cadets' participation in the activity will serve as the confirmation of this TP.

END OF LESSON CONFIRMATION

QUESTIONS

Q1. What is the first stroke of a four-stroke piston-powered engine and what does it do?

Q2. What is the second stroke of a four-stroke piston-powered engine and what does it do?

Q3. What is the third stroke of a four-stroke piston-powered engine and what does it do?

Q4. What is the fourth stroke of a four-stroke piston-powered engine and what does it do?

ANTICIPATED ANSWERS

A1. The intake stroke draws fuel and air into the cylinder.

A2. The compression stroke forces the fuel and air into the combustion chamber.

A3. The power stroke transmits the energy of the exploding fuel to the crankshaft.

A4. The exhaust stroke cleans the cylinder of exhaust fumes and prepares it for the next intake stroke.

CONCLUSION

HOMEWORK/READING/PRACTICE

N/A.

METHOD OF EVALUATION

N/A.

CLOSING STATEMENT

The four-stroke piston-powered engine has the most complex operation of all the engines that are studied in the Air Cadet Program. This engine type is, by far, the most common that cadets will encounter at the airfield and in many other places, such as in lawn mowers, automobiles and boats.

Unofficial convenience copy of A-CR-CCP-802/PF-001, cached 2026-11-08 from https://app.cadets.gc.ca/cadet-publications/A-CR-CCP-802-PF-001/A-CR-CCP-802-PF-001.pdf.
Verify against the official publication.

INSTRUCTOR NOTES/REMARKS

If the squadron has access to a computer and projector, software to demonstrate engine operation can be found at the Website listed under reference C3-086.

REFERENCES

C3-086 NASA Glenn Research Center. *Engines 101.* Retrieved 21 February 2007, from http://www.grc.nasa.gov/WWW/K-12/airplane/icengine.html.

C3-087 NASA Glenn Research Center. *Propulsion Index.* Retrieved 21 February 2007, from http://www.grc.nasa.gov/WWW/K-12/airplane/shortp.html.

C3-116 A-CR-CCP-263/PT-001/(ISBN 0-9680390-5-7) MacDonald, A. F. and Peppler, I. L. (2000). *From the Ground Up: Millennium Edition.* Ottawa, ON: Aviation Publishers Co. Limited.

Unofficial convenience copy of A-CR-CCP-802/PF-001, cached 2026-11-08 from https://app.cadets.gc.ca/cadet-publications/A-CR-CCP-802-PF-001/A-CR-CCP-802-PF-001.pdf.
Verify against the official publication.

ENGINE STROKES

INTAKE STROKE

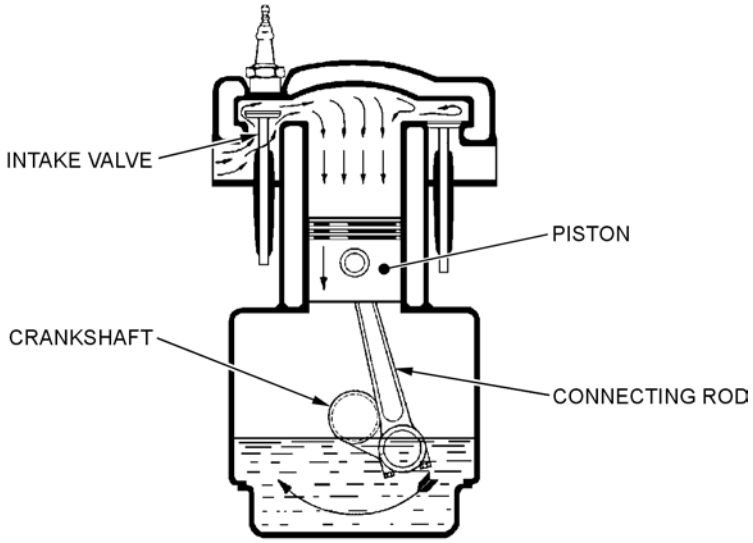

Cadets Canada: RCSU Pacific, 2007, Air Cadet Master Lesson Plans. Retrieved 7 March 2007, from http://www.regions.cadets.ca/pac/aircad/resources/mlp_air_e.asp

Figure A-1 Intake Stroke

COMPRESSION STROKE

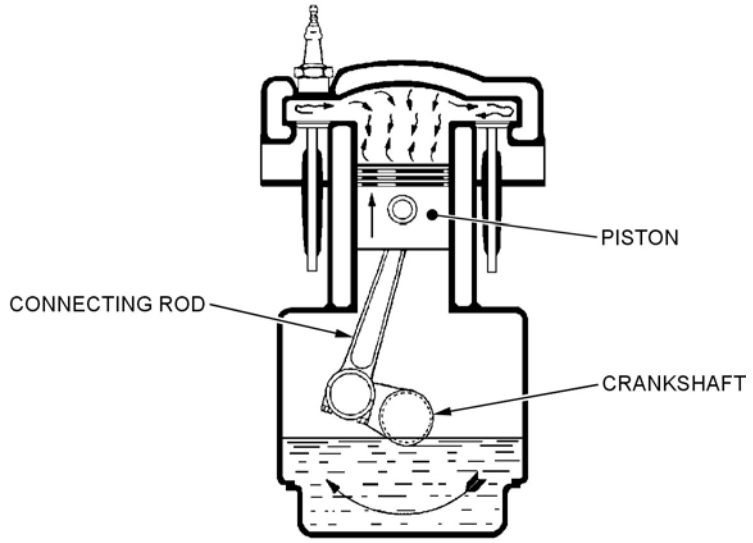

Cadets Canada: RCSU Pacific, 2007, Air Cadet Master Lesson Plans. Retrieved 7 March 2007, from http://www.regions.cadets.ca/pac/aircad/resources/mlp_air_e.asp

Figure A-2 Compression Stroke

Unofficial convenience copy of A-CR-CCP-802/PF-001, cached 2026-11-08 from https://app.cadets.gc.ca/cadet-publications/A-CR-CCP-802-PF-001/A-CR-CCP-802-PF-001.pdf.
Verify against the official publication.

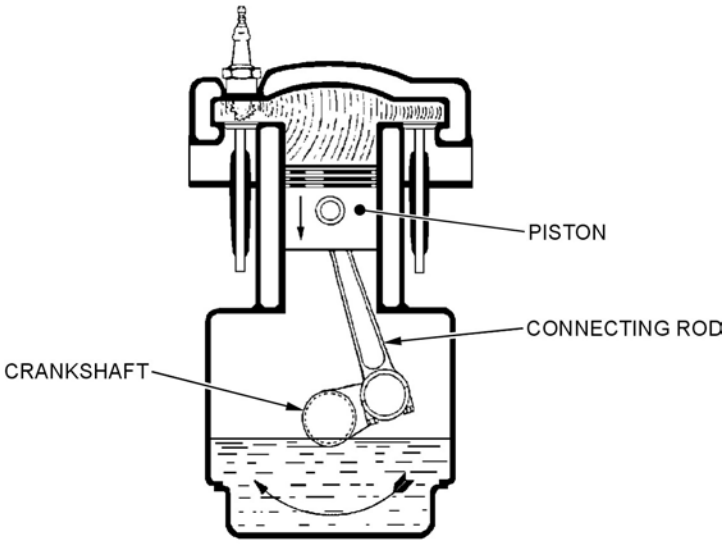

Cadets Canada: RCSU Pacific, 2007, Air Cadet Master Lesson Plans. Retrieved 7 March 2007, from http://www.regions.cadets.ca/pac/aircad/resources/mlp_air_e.asp

Figure A-3 Power Stroke

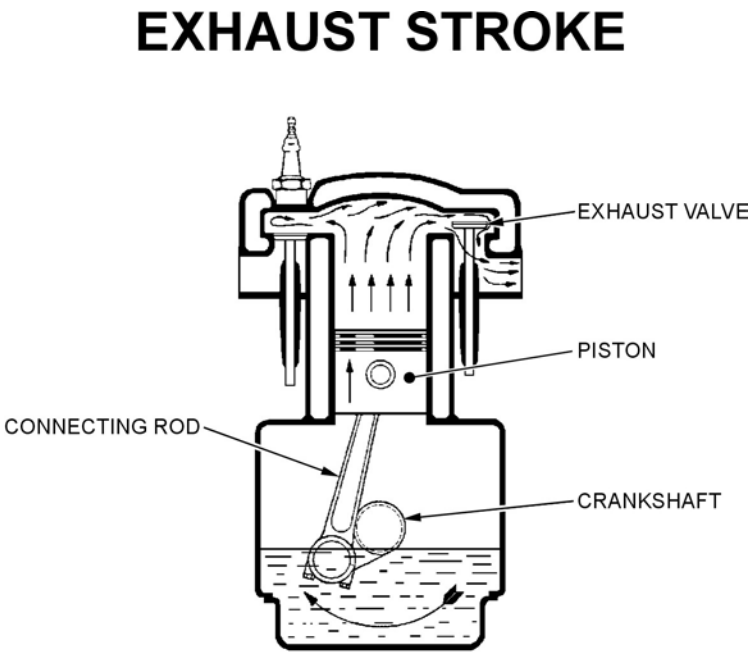

Cadets Canada: RCSU Pacific, 2007, Air Cadet Master Lesson Plans. Retrieved 7 March 2007, from http://www.regions.cadets.ca/pac/aircad/resources/mlp_air_e.asp

Figure A-4 Exhaust Stroke

Unofficial convenience copy of A-CR-CCP-802/PF-001, cached 2026-11-08 from https://app.cadets.gc.ca/cadet-publications/A-CR-CCP-802-PF-001/A-CR-CCP-802-PF-001.pdf.
Verify against the official publication.

FOUR-STROKE CYCLES

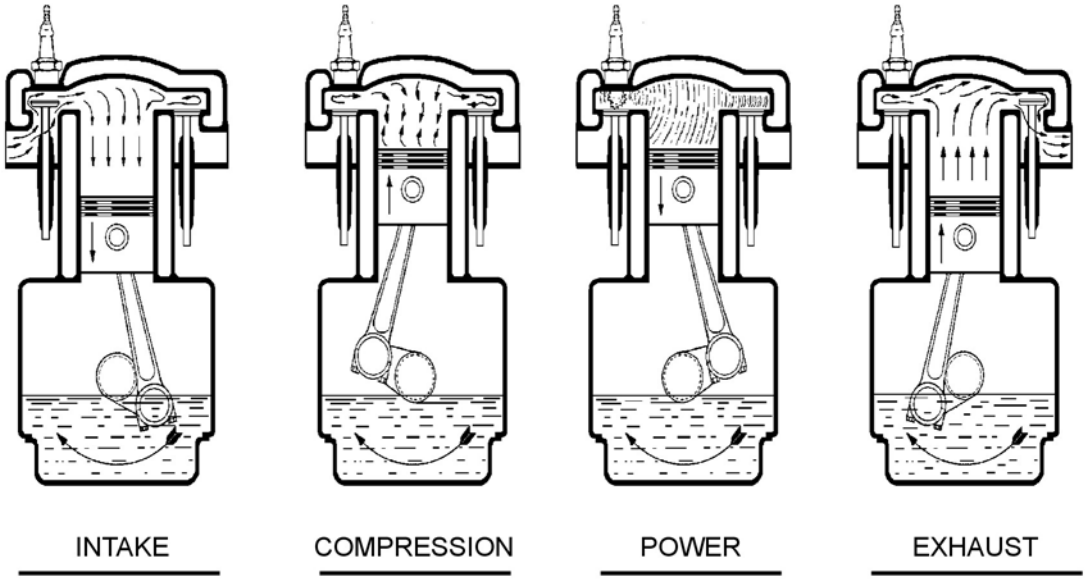

Cadets Canada: RCSU Pacific, 2007, Air Cadet Master Lesson Plans. Retrieved 7 March 2007, from http://www.regions.cadets.ca/pac/aircad/resources/mlp_air_e.asp

Figure A-5 Cycles of a Four-stroke Piston-powered Engine

VALVE MECHANISM

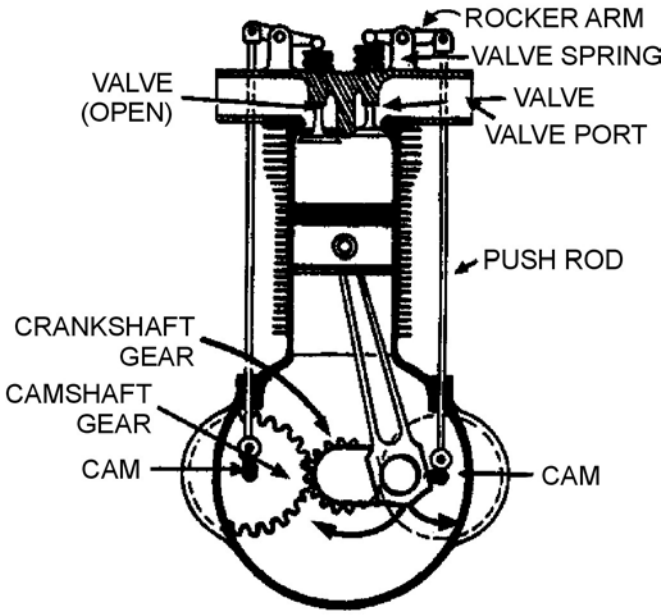

A-CR-CCP-263/PT-001 (p. 56)

Figure A-6 Valve Mechanism

Unofficial convenience copy of A-CR-CCP-802/PF-001, cached 2026-11-08 from https://app.cadets.gc.ca/cadet-publications/A-CR-CCP-802-PF-001/A-CR-CCP-802-PF-001.pdf.
Verify against the official publication.

THIS PAGE INTENTIONALLY LEFT BLANK

Unofficial convenience copy of A-CR-CCP-802/PF-001, cached 2026-11-08 from https://app.cadets.gc.ca/cadet-publications/A-CR-CCP-802-PF-001/A-CR-CCP-802-PF-001.pdf.
Verify against the official publication.

ACTIVITY IDENTIFYING DIFFERENT STROKES

FILL IN THE NAME OF EACH STROKE IN THE CORRECT SPACE.

NAME: _____

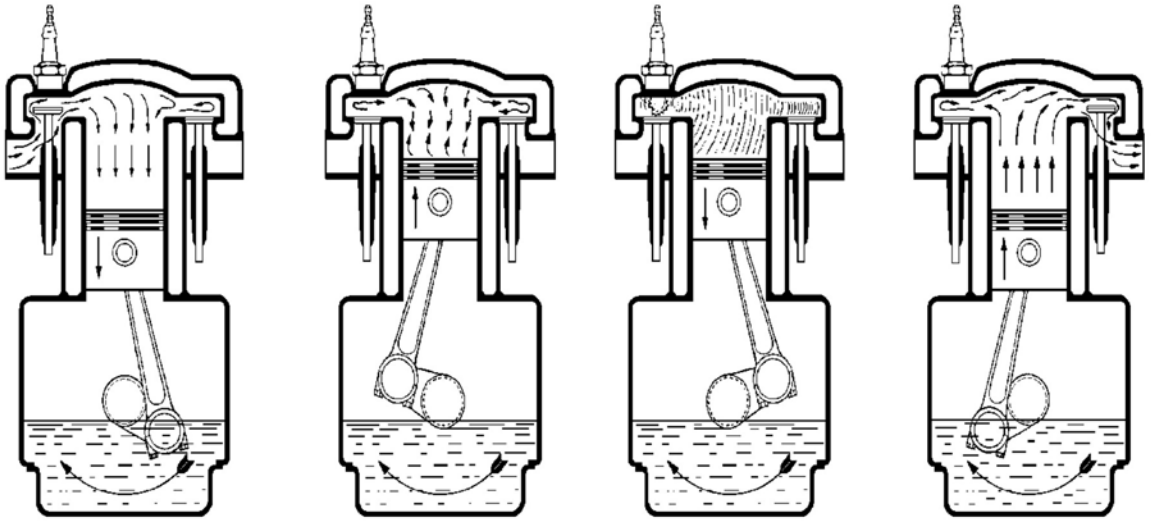

_____ _____ _____ _____

Cadets Canada: RCSU Pacific, 2007, Air Cadet Master Lesson Plans. Retrieved 7 March 2007, from http://www.regions.cadets.ca/pac/aircad/resources/mlp_air_e.asp

Figure B-1 Identify the Cycles

Unofficial convenience copy of A-CR-CCP-802/PF-001, cached 2026-11-08 from https://app.cadets.gc.ca/cadet-publications/A-CR-CCP-802-PF-001/A-CR-CCP-802-PF-001.pdf.
Verify against the official publication.

THIS PAGE INTENTIONALLY LEFT BLANK

Unofficial convenience copy of A-CR-CCP-802/PF-001, cached 2026-11-08 from https://app.cadets.gc.ca/cadet-publications/A-CR-CCP-802-PF-001/A-CR-CCP-802-PF-001.pdf.
Verify against the official publication.