ROYAL CANADIAN AIR CADETS

PROFICIENCY LEVEL TWO

INSTRUCTIONAL GUIDE

SECTION 2

EO M232.02 – IDENTIFY THE COMPONENTS OF PISTON-POWERED INTERNAL COMBUSTION ENGINES

Total Time: 60 min

PREPARATION

PRE-LESSON INSTRUCTIONS

Resources needed for the delivery of this lesson are listed in the lesson specification located in A-CR-CCP-802/PG-001, Chapter 4. Specific uses for said resources are identified throughout the Instructional Guide within the TP for which they are required.

Review the lesson content and become familiar with the material prior to delivering the lesson.

Create slides or handouts of Figures A-1 to A-3, and B-1, C-1 and D-1 respectively.

Copy handouts of Figure A-4 for each cadet.

PRE-LESSON ASSIGNMENT

N/A.

APPROACH

An interactive lecture was chosen for TP1 to TP3 to introduce the components of internal combustion engines and give an overview of them.

An in-class activity was chosen for TP4 as it is an interactive way to provoke thought and stimulate an interest among cadets.

INTRODUCTION

REVIEW

N/A.

OBJECTIVES

By the end of this lesson the cadet shall be expected to identify the components of piston-powered internal combustion engines.

IMPORTANCE

It is important for cadets to learn about the components of piston-powered internal combustion engines so that they can develop an understanding of subsequent and related principles of aviation.

Unofficial convenience copy of A-CR-CCP-802/PF-001, cached 2026-11-08 from https://app.cadets.gc.ca/cadet-publications/A-CR-CCP-802-PF-001/A-CR-CCP-802-PF-001.pdf.
Verify against the official publication.

Teaching point 1 **Identify and Explain the Operations of the Major Components of a Piston-powered Engine**

Time: 25 min Method: Interactive Lecture

MAJOR COMPONENTS OF A PISTON-POWERED ENGINE



Show the cadets a slide or handout of the piston-powered engine in Figure A-1.

Cylinder. In order to understand how an engine works, it is necessary to first know what parts make up an engine. The cylinder is the main component. This is where the combustion of a gasoline and air mixture takes place.

Piston. The piston is found in the cylinder and is driven up and down by the exploding air and fuel mixture.

Connecting Rod. The piston is attached by a connecting rod to the crankshaft. The connecting rod is joined to the piston and to the crankshaft with bearings which allow movement so that the reciprocating (up-and-down) motion of the piston can be transformed into rotary (spinning) motion of the crankshaft.

Crankshaft. As the piston drives up and down, the connecting rod rotates around the crankshaft, turning it. The crankshaft can rotate while the piston goes up and down.

Camshaft. The crankshaft often turns a second shaft called a camshaft. The cams are bumps on the camshaft that open and close the intake and exhaust valves at the correct time. Of course, the crankshaft also powers the aircraft's propeller. Each cylinder has at least one set of valves operated by the cams on the camshaft. The intake valve opens to let the mixture of gasoline and air into the cylinder and then it closes. Once this is done and the mixture is burnt, the exhaust valve opens to release the exhaust and then closes.

Distributor. The gasoline and air mixture is ignited by a spark plug. Most aircraft have two spark plugs in every cylinder. The fuel takes time to burn completely. Because of this time delay, the spark must happen at just the right time; a fraction of a second before the piston has reached the top of its stroke. In a multi-cylinder engine such as aircraft use, an electrical signal must be sent to each cylinder's spark plug at exactly the right time. The timing and distribution of spark sometimes relies on a central distributor, which is worked by gears from the crankshaft. Should this distributor fail, the engine will stop. A better, though more expensive method, is to equip each cylinder with its own spark timing and delivery system.



Show the cadets a slide or handout of a carburetor in Figure A-2.

Carburetor. Before fuel is delivered to the cylinder for detonation, it is mixed with air in exact proportion. A fuel injector or a carburetor does this. For effective detonation and clean burning, the fuel must be broken into tiny droplets and mixed with air.

Oil Sump. The moving parts of the engine all need to be coated with engine oil. Oil is provided under pressure to make sure that all moving parts are coated. A wet sump stores the oil supply in the crankcase with the crankshaft, while a dry sump stores the oil in a separate tank and delivers it to the engine via piping.

Unofficial convenience copy of A-CR-CCP-802/PF-001, cached 2026-11-08 from https://app.cadets.gc.ca/cadet-publications/A-CR-CCP-802-PF-001/A-CR-CCP-802-PF-001.pdf.
Verify against the official publication.



Show the cadets a slide or handout of a dry-sump lubrication system in Figure A-3.



The oil is circulated and re-used, serving other purposes in addition to lubrication. As the oil circulates, it cleans the engine by flushing dirt out of the engine. It also cools the engine by carrying heat away and it improves the pressure seal to keep the combustion chamber airtight.



Have the cadets label the parts of a piston-powered engine in Figure A-4.

CONFIRMATION OF TEACHING POINT 1

QUESTIONS

Q1. Where does combustion take place in a piston-powered engine?

Q2. What two valves does a piston-powered engine have?

Q3. Why does the piston go up and down?

ANTICIPATED ANSWERS

A1. In a piston-powered engine, combustion takes place in the cylinder.

A2. Piston-powered engines have an intake valve and an exhaust valve.

A3. The detonation of the air and fuel mixture drives the pistons up and down.

Teaching point 2 **Explain the Difference Between Rotary Engines and Radial Engines**

Time: 5 min Method: Interactive Lecture

Some early aircraft engines used rotary engines in which the cylinders themselves rotated around the stationary central crankshaft. These were different than the later radial engines in which the stationary cylinders were arranged around the rotating crankshaft.

Many larger older aircraft had radial engines. In this design the cylinders were arranged in a circle at the front of the engine with the cylinder tops pointed outwards. The crankshaft ran through the middle of the cylinders to the front of the aircraft. Radial engines had many cylinders; some aircraft from World War II had 13 cylinders.

Unofficial convenience copy of A-CR-CCP-802/PF-001, cached 2026-11-08 from https://app.cadets.gc.ca/cadet-publications/A-CR-CCP-802-PF-001/A-CR-CCP-802-PF-001.pdf.
Verify against the official publication.



Show the cadets a slide or handout of the radial engine located at Annex B.

Even older aircraft, before and during World War I, had rotary engines that were different but were often confused with the later radial types. In the rotary engine, the crankshaft was stationary and the cylinders rotated around the crankshaft. This is the opposite of the radial engine, which had stationary cylinders and rotating crankshaft. Rotary engine design was abandoned because the great weight of the spinning cylinders was found to interfere with turning the aircraft in flight.

CONFIRMATION OF TEACHING POINT 2

QUESTIONS

Q1. In a rotary engine which part rotates and which part is stationary?

Q2. Why was rotary engine design abandoned for aircraft?

Q3. How were the stationary cylinders arranged in an aircraft's radial engine?

ANTICIPATED ANSWERS

A1. In a rotary engine the cylinders rotate and the driveshaft is stationary.

A2. Rotary engine design was abandoned for aircraft because the great weight of the rotating cylinders was found to interfere with turning the aircraft in flight.

A3. In radial engines the cylinders were arranged in a circle at the front of the engine with the cylinder tops pointed outwards.

Teaching point 3 **Describe Aircraft Engine Arrangements**

Time: 10 min Method: Interactive Lecture

Internal combustion engines come in a variety of styles that are described by how the cylinders are configured.



Show the cadets a slide or handout of the horizontally opposed engine located at Annex C.

The horizontally opposed engine is most commonly used in general aviation airplanes. This engine has two banks of cylinders lying flat, directly opposite each other and working on the same crankshaft. There may be four, six or eight cylinders. The advantage of this engine type is its flat shape that generates less form drag. Form drag is a force that opposes the aircraft's movement through the air.



Show the cadets a slide or handout of an in-line engine located at Annex D.

Unofficial convenience copy of A-CR-CCP-802/PF-001, cached 2026-11-08 from https://app.cadets.gc.ca/cadet-publications/A-CR-CCP-802-PF-001/A-CR-CCP-802-PF-001.pdf.
Verify against the official publication.

Some older aircraft have in-line engines. This was the first type of aircraft engine used in great numbers. In an in-line engine, the cylinders are lined up in a row from the front of the engine to the back, with the tops pointed up. The crankshaft runs under the cylinders to the front of the aircraft.

CONFIRMATION OF TEACHING POINT 3

QUESTIONS

Q1. How are the cylinders arranged in an in-line engine?

Q2. How are the cylinders arranged in a horizontally opposed engine?

Q3. Why are horizontally opposed engines the favoured design for small aircraft engines?

ANTICIPATED ANSWERS

A1. In an in-line engine, the cylinders are lined up in a row from the front of the engine to the back.

A2. A horizontally opposed engine has two banks of cylinders lying flat, directly opposite each other.

A3. The horizontally opposed engine's flat shape generates less form drag.

Teaching point 4 **Play a Game of Piston-powered Baseball**

Time: 15 min Method: In-Class Activity

ACTIVITY

OBJECTIVE

The objective of this activity is to have the cadets use the information learned in this lesson to play a game that reviews the topic.

RESOURCES

- List of questions and answers located at Annex E,
- Coin,
- One large die,
- Coloured poster board, and
- Masking tape.

ACTIVITY LAYOUT

Re-arrange the classroom into the shape of a baseball diamond with poster board bases, using masking tape to connect the bases with baselines.

ACTIVITY INSTRUCTIONS

- For this review game, the instructor acts as, "pitcher", "umpire" and "scorekeeper".
- Two teams are chosen and each is seated in a "dugout" of chairs in opposing baselines in "batting order". A coin is tossed to see which team is at bat first.

Unofficial convenience copy of A-CR-CCP-802/PF-001, cached 2026-11-08 from https://app.cadets.gc.ca/cadet-publications/A-CR-CCP-802-PF-001/A-CR-CCP-802-PF-001.pdf.
Verify against the official publication.

- The instructor “pitches” a question to the first batter. Teammates are encouraged to give hints to the batter, but the batter must choose the answer.
- If the answer is wrong, the batter is out.
- If the answer is correct, the die is thrown. If a one, two or three comes up, the player goes to first, second or third base, respectively. A four is a home run.
- A five on the die means a foul ball and the player must field another question. There are two ways to be out – either answering incorrectly or rolling a six.
- Players on base are “forced” ahead by the next runner and will score if forced to home base.
- After three outs, the other team gets to bat.
- After five runs are batted in, the next team is up at bat.
- The process is repeated as long as time permits.

SAFETY

N/A.

CONFIRMATION OF TEACHING POINT 4

The cadets’ participation in the activity will serve as the confirmation of this TP.

END OF LESSON CONFIRMATION

QUESTIONS

Q1. Where does combustion take place in a piston-powered engine?

Q2. How were the stationary cylinders arranged in an aircraft’s radial engine?

Q3. Why are horizontally opposed engines the favoured design for small aircraft engines?

ANTICIPATED ANSWERS

A1. In a piston-powered engine, combustion takes place in the cylinder.

A2. In radial engines, the cylinders were arranged in a circle at the front of the engine with the cylinder tops pointed outwards.

A3. The horizontally opposed engine’s flat shape generates less form drag.

CONCLUSION

HOMEWORK/READING/PRACTICE

N/A.

METHOD OF EVALUATION

N/A.

CLOSING STATEMENT

The generation and control of power is limited only by our imaginations and so, for over one 100 years, aircraft engines have been constantly improved with new designs.

Unofficial convenience copy of A-CR-CCP-802/PF-001, cached 2026-11-08 from https://app.cadets.gc.ca/cadet-publications/A-CR-CCP-802-PF-001/A-CR-CCP-802-PF-001.pdf.
Verify against the official publication.

INSTRUCTOR NOTES/REMARKS

If a computer and projector are available, software to demonstrate engine operation can be found at the Websites listed below.

REFERENCES

C3-003 (ISBN 0-943210-44-5) Pike, B. and Busse, C. (1995). *101 More Games for Trainers.* Minneapolis, MN: Lakewood Books.

C3-086 NASA Glenn Research Center. *Engines 101.* Retrieved 21 February 2007, from http://www.grc.nasa.gov/WWW/K-12/airplane/icengine.html.

C3-087 NASA Glenn Research Center. *Propulsion Index.* Retrieved 21 February 2007, from http://www.grc.nasa.gov/WWW/K-12/airplane/shortp.html.

C3-116 A-CR-CCP-263/PT-001/(ISBN 0-9680390-5-7) MacDonald, A. F. and Peppler, I. L. (2000). *From the Ground Up: Millennium Edition.* Ottawa, ON: Aviation Publishers Co. Limited.

Unofficial convenience copy of A-CR-CCP-802/PF-001, cached 2026-11-08 from https://app.cadets.gc.ca/cadet-publications/A-CR-CCP-802-PF-001/A-CR-CCP-802-PF-001.pdf.
Verify against the official publication.

THIS PAGE INTENTIONALLY LEFT BLANK

Unofficial convenience copy of A-CR-CCP-802/PF-001, cached 2026-11-08 from https://app.cadets.gc.ca/cadet-publications/A-CR-CCP-802-PF-001/A-CR-CCP-802-PF-001.pdf.
Verify against the official publication.

IDENTIFYING COMPONENTS OF PISTON-POWERED INTERNAL COMBUSTION ENGINES

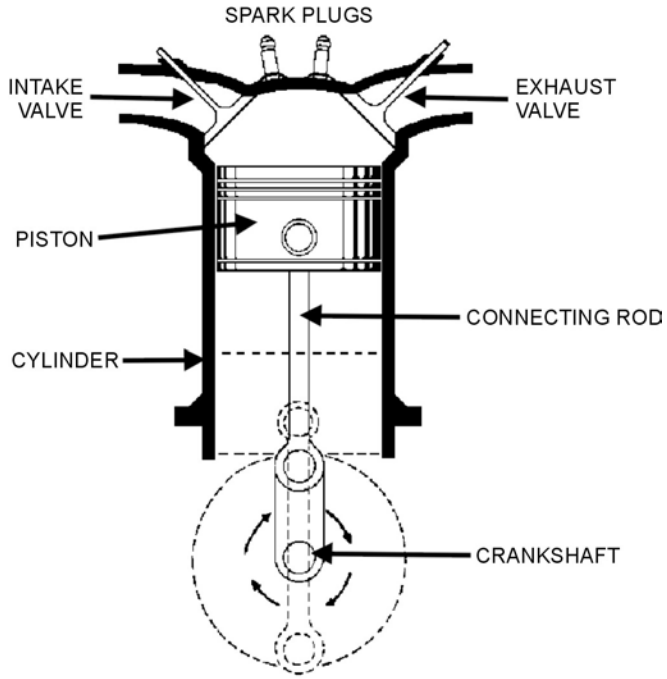

A-CR-CCP-263/PT-001 (p. 53)

Figure A-1 Piston-powered Internal Combustion Engine

Unofficial convenience copy of A-CR-CCP-802/PF-001, cached 2026-11-08 from https://app.cadets.gc.ca/cadet-publications/A-CR-CCP-802-PF-001/A-CR-CCP-802-PF-001.pdf.
Verify against the official publication.

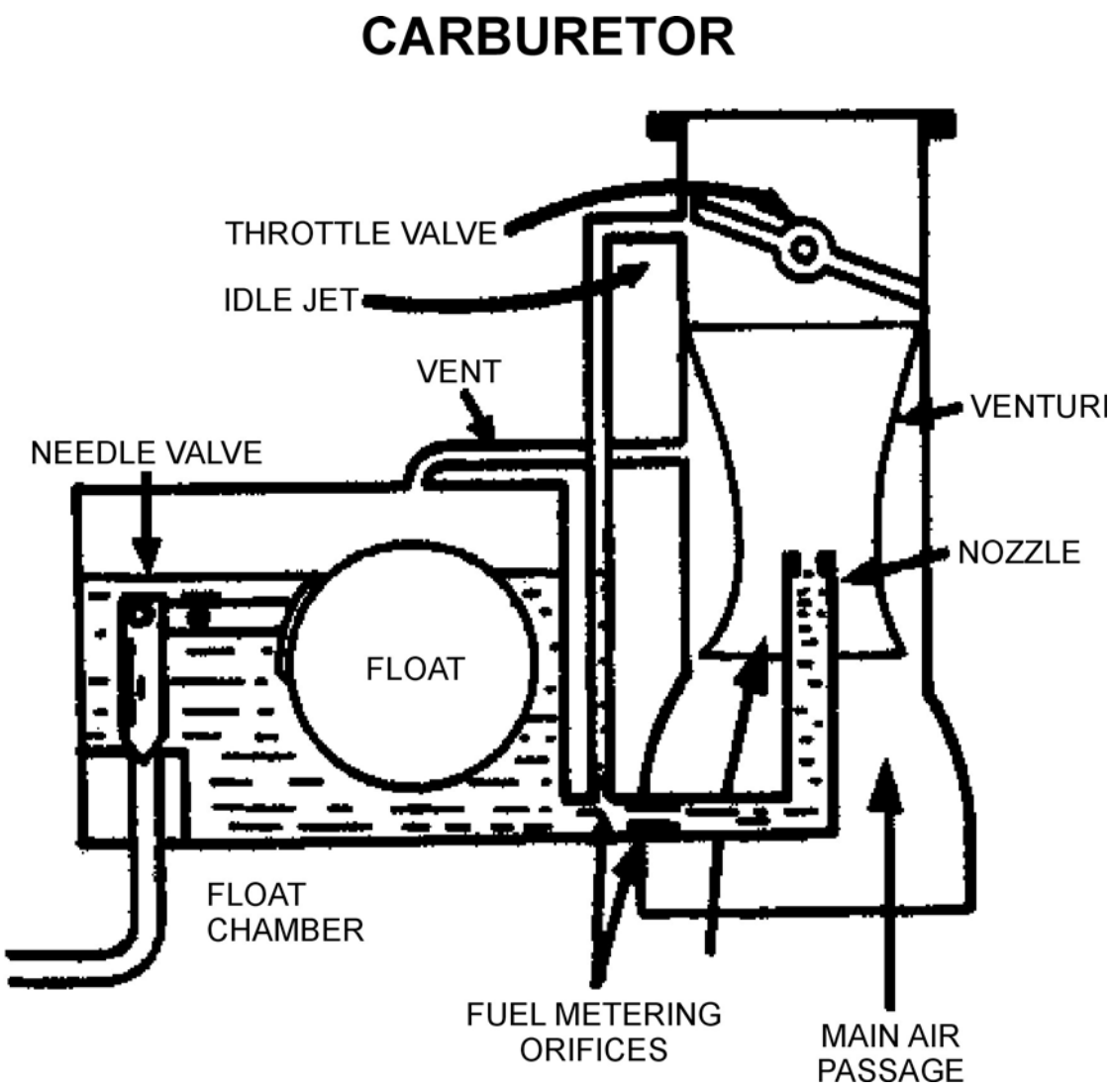

A-CR-CCP-263/PT-001 (p. 62)

Figure A-2 Carburetor Components

Unofficial convenience copy of A-CR-CCP-802/PF-001, cached 2026-11-08 from https://app.cadets.gc.ca/cadet-publications/A-CR-CCP-802-PF-001/A-CR-CCP-802-PF-001.pdf.
Verify against the official publication.

DRY-SUMP LUBRICATION SYSTEM

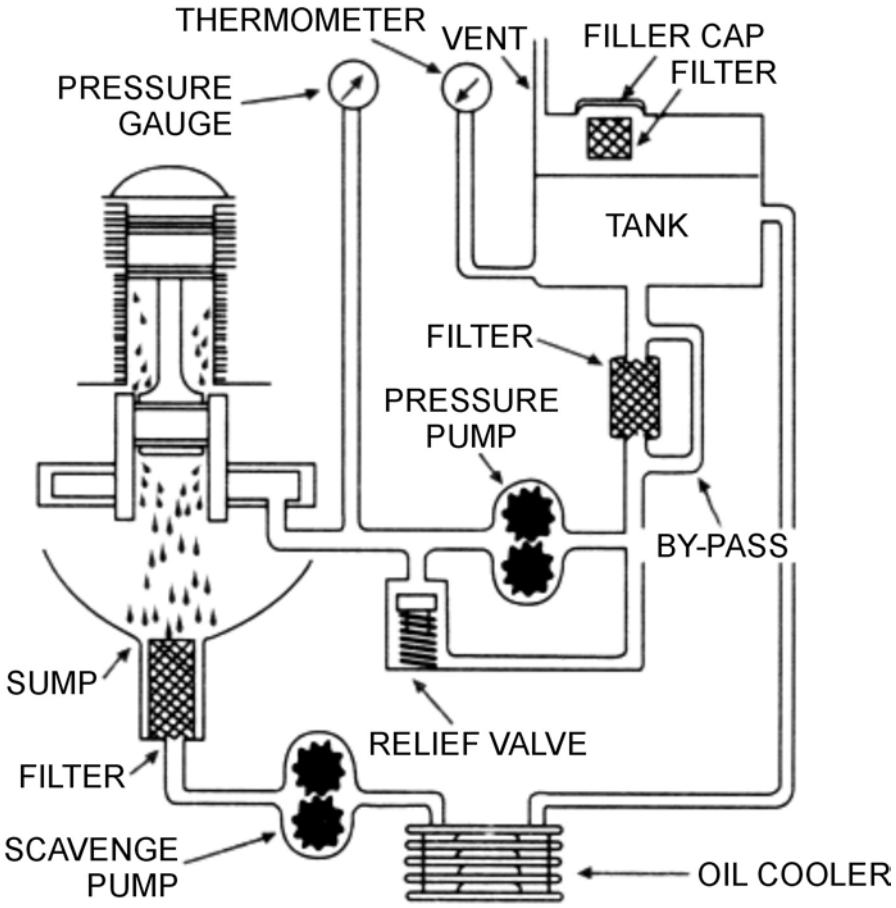

A-CR-CCP-263/PT-001 (p. 62)

Figure A-3 Engine Lubrication

Unofficial convenience copy of A-CR-CCP-802/PF-001, cached 2026-11-08 from https://app.cadets.gc.ca/cadet-publications/A-CR-CCP-802-PF-001/A-CR-CCP-802-PF-001.pdf.
Verify against the official publication.

FILL IN THE PARTS OF THE INTERNAL COMBUSTION ENGINE IN THE CORRECT SPACE.

NAME: _____

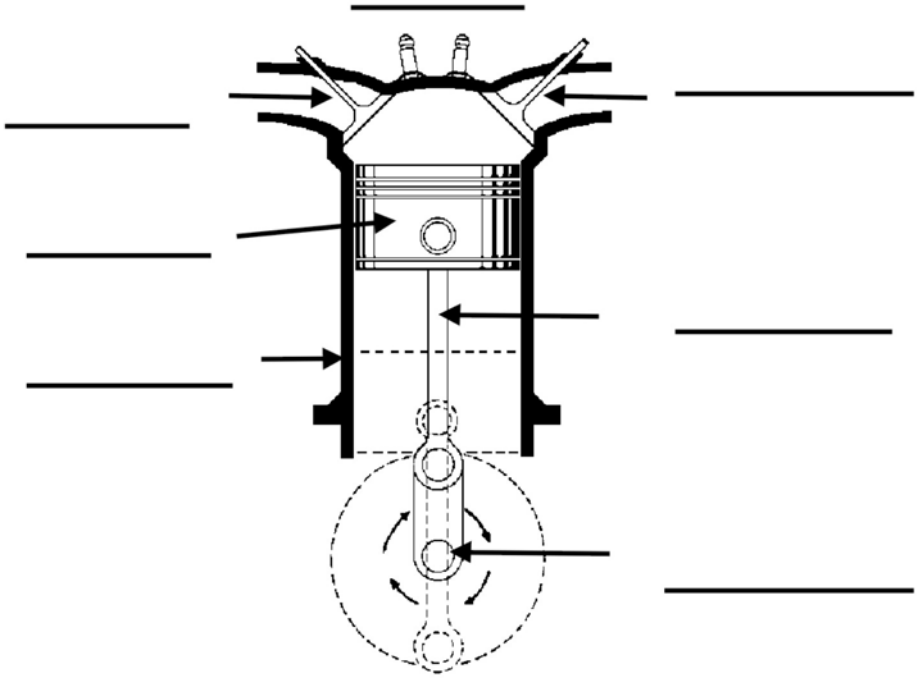

A-CR-CCP-263/PT-001 (p. 53)

Figure A-4 Engine Parts Identification

Unofficial convenience copy of A-CR-CCP-802/PF-001, cached 2026-11-08 from https://app.cadets.gc.ca/cadet-publications/A-CR-CCP-802-PF-001/A-CR-CCP-802-PF-001.pdf.
Verify against the official publication.

RADIAL ENGINE

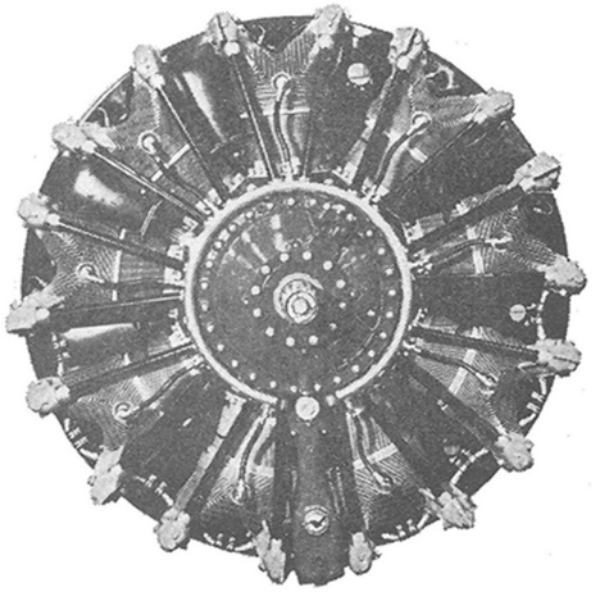

A-CR-CCP-263/PT-001 (p. 52)

Figure B-1 Radial Engine Configuration

Unofficial convenience copy of A-CR-CCP-802/PF-001, cached 2026-11-08 from https://app.cadets.gc.ca/cadet-publications/A-CR-CCP-802-PF-001/A-CR-CCP-802-PF-001.pdf.
Verify against the official publication.

THIS PAGE INTENTIONALLY LEFT BLANK

Unofficial convenience copy of A-CR-CCP-802/PF-001, cached 2026-11-08 from https://app.cadets.gc.ca/cadet-publications/A-CR-CCP-802-PF-001/A-CR-CCP-802-PF-001.pdf.
Verify against the official publication.

HORIZONTALLY OPPOSED ENGINE

HORIZONTALLY OPPOSED

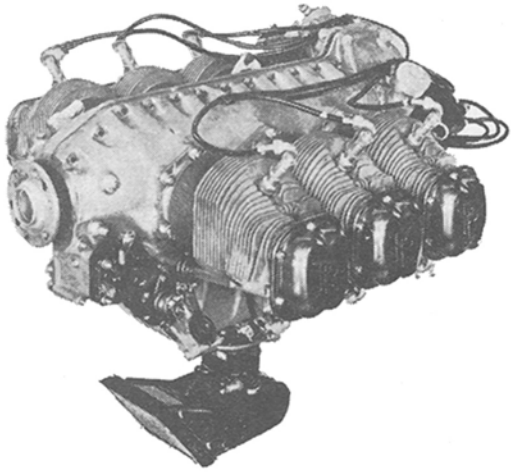

A-CR-CCP-263/PT-001 (p. 52)

Figure C-1 Horizontally Opposed Engine Configuration

Unofficial convenience copy of A-CR-CCP-802/PF-001, cached 2026-11-08 from https://app.cadets.gc.ca/cadet-publications/A-CR-CCP-802-PF-001/A-CR-CCP-802-PF-001.pdf.
Verify against the official publication.

THIS PAGE INTENTIONALLY LEFT BLANK

Unofficial convenience copy of A-CR-CCP-802/PF-001, cached 2026-11-08 from https://app.cadets.gc.ca/cadet-publications/A-CR-CCP-802-PF-001/A-CR-CCP-802-PF-001.pdf.
Verify against the official publication.

IN-LINE ENGINE

IN-LINE

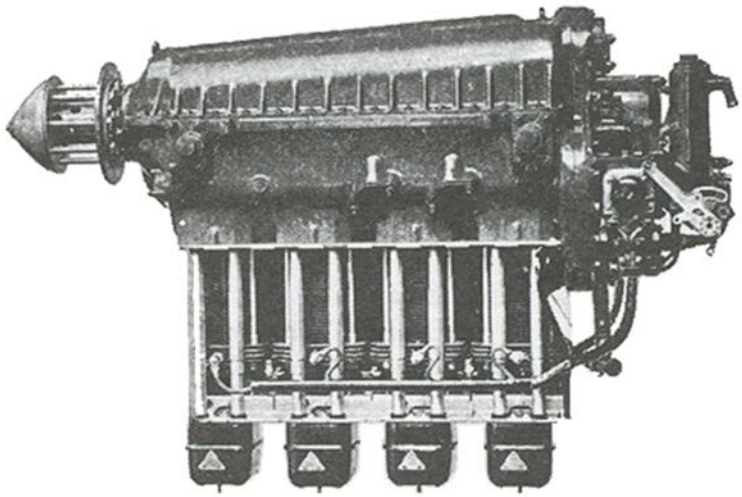

A-CR-CCP-263/PT-001 (p. 52)

Figure D-1 In-line Engine Configuration

Unofficial convenience copy of A-CR-CCP-802/PF-001, cached 2026-11-08 from https://app.cadets.gc.ca/cadet-publications/A-CR-CCP-802-PF-001/A-CR-CCP-802-PF-001.pdf.
Verify against the official publication.

THIS PAGE INTENTIONALLY LEFT BLANK

Unofficial convenience copy of A-CR-CCP-802/PF-001, cached 2026-11-08 from https://app.cadets.gc.ca/cadet-publications/A-CR-CCP-802-PF-001/A-CR-CCP-802-PF-001.pdf.
Verify against the official publication.

QUESTIONS AND ANSWERS FOR TP4 PISTON-POWERED BASEBALL

QUESTIONS

Q1. Where does combustion take place in a piston-powered engine?

Q2. What two valves does a piston-powered engine have?

Q3. Why does the piston go up and down?

Q4. In a rotary engine which part rotates and which part is stationary?

Q5. Why was rotary engine design abandoned for aircraft?

Q6. How were the stationary cylinders arranged in an aircraft's radial engine?

Q7. How are the cylinders arranged in an in-line engine?

Q8. How are the cylinders arranged in a horizontally opposed engine?

Q9. Why are horizontally opposed engines the favoured design for small aircraft engines?

ANTICIPATED ANSWERS

A1. In a piston-powered engine, combustion takes place in the cylinder.

A2. Piston-powered engines have an intake valve and an exhaust valve.

A3. The detonation of the air and fuel mixture drives the pistons up and down.

A4. In a rotary engine the cylinders rotate and the driveshaft is stationary.

A5. Rotary engine design was abandoned for aircraft because the great weight of the rotating cylinders was found to interfere with turning the aircraft in flight.

A6. In radial engines the cylinders were arranged in a circle at the front of the engine with the cylinder tops pointed outwards.

A7. In an in-line engine, the cylinders are lined up in a row from the front of the engine to the back.

A8. A horizontally opposed engine has two banks of cylinders lying flat, directly opposite each other.

A9. The horizontally opposed engine's flat shape generates less form drag.

Unofficial convenience copy of A-CR-CCP-802/PF-001, cached 2026-11-08 from https://app.cadets.gc.ca/cadet-publications/A-CR-CCP-802-PF-001/A-CR-CCP-802-PF-001.pdf.
Verify against the official publication.

THIS PAGE INTENTIONALLY LEFT BLANK

Unofficial convenience copy of A-CR-CCP-802/PF-001, cached 2026-11-08 from https://app.cadets.gc.ca/cadet-publications/A-CR-CCP-802-PF-001/A-CR-CCP-802-PF-001.pdf.
Verify against the official publication.