ROYAL CANADIAN AIR CADETS

PROFICIENCY LEVEL TWO

INSTRUCTIONAL GUIDE

SECTION 1

EO M232.01 – IDENTIFY TYPES OF AIRCRAFT ENGINES

Total Time: 30 min

PREPARATION

PRE-LESSON INSTRUCTIONS

Resources needed for the delivery of this lesson are listed in the lesson specification located in A-CR-CCP-802/PG-001, Chapter 4. Specific uses for said resources are identified throughout the Instructional Guide within the TP for which they are required.

Review the lesson content and become familiar with the material prior to delivering the lesson.

Create slides or handouts of Annexes A and B.

PRE-LESSON ASSIGNMENT

N/A.

APPROACH

An interactive lecture was chosen for this lesson to introduce types of aircraft engines and give an overview of them.

INTRODUCTION

REVIEW

N/A.

OBJECTIVES

By the end of this lesson the cadet shall be expected to identify types of aircraft engines.

IMPORTANCE

Engines are one of the key systems in a powered aircraft. It is important for cadets to learn about types of aircraft engines so that they can understand subsequent and related aspects of aviation.

Unofficial convenience copy of A-CR-CCP-802/PF-001, cached 2026-11-08 from https://app.cadets.gc.ca/cadet-publications/A-CR-CCP-802-PF-001/A-CR-CCP-802-PF-001.pdf.
Verify against the official publication.

Teaching point 1 **Explain That a Powered Aircraft Needs a Means of Propulsion**

Time: 10 min Method: Interactive Lecture

A powered aircraft needs a means of propulsion to overcome drag and allow the wings to generate sufficient lift to overcome weight.

The propeller and jet engine are very closely related, providing thrust by the same means – the acceleration of a mass of air. The propeller generates thrust by acting on a large mass of air, giving it a relatively small acceleration. The jet engine does exactly the same thing by giving a larger acceleration to a smaller mass of air.

The most common engine types used for aviation propulsion employ internal combustion and they include:

- rocket engines,
- gas turbine jet engines, and
- reciprocating piston-powered engines.



Show the cadets a slide or handout of rocket engine applications in Figures A-1 and A-2.

The earliest vehicle engines were rocket engines used to power ancient Chinese fire arrows. This method of propulsion proved so effective that, with many improvements, it is still commonly used today for many applications including space exploration. Self-contained with their own oxidizer, rockets have the great advantage of being able to function in a vacuum such as outer space.



All propulsion systems are reactive, meaning that they all employ an equal and opposite reaction predicted by Newton's third law of motion.

Piston-powered internal combustion engines were developed in the late nineteenth century. They were available to Orville and Wilbur Wright, who designed their 1903 flyer with a four-cylinder piston-powered engine.



Show the cadets a slide or handout of a Harvard piston-powered engine application in Figures A-3 and A-4.

Piston-powered engines are the most common vehicle engine of all and the one that Proficiency Level Two cadets will explore in most detail. In many ways, pistons are the most complicated system of converting the chemical energy of fuel into the energy of motion but they are found in many places, including aircraft, automobiles, boats and lawnmowers.



Show the cadets a slide or handout of a gas turbine jet engine application in Figures A-5 and A-6. Point out the airflow path and combustion location in the schematic.

Unofficial convenience copy of A-CR-CCP-802/PF-001, cached 2026-11-08 from https://app.cadets.gc.ca/cadet-publications/A-CR-CCP-802-PF-001/A-CR-CCP-802-PF-001.pdf.
Verify against the official publication.

Gas turbine jet engines are improvements upon simple ramjets. The ramjet is a liquid-fuelled rocket-like engine, which uses atmospheric oxygen to burn fuel. One of the most limiting aspects of a ramjet is that it requires high velocity to work. Therefore it cannot start combustion until it is up to speed – it must be launched from a speeding vehicle. Air-launched missiles are one of the few applications of ramjet engines.

Any turbine converts the energy of moving liquid or gases, such as jet exhaust or wind, into rotary motion to turn a shaft. A windmill is a turbine which uses wind energy to turn a shaft. Among other advantages, adding a turbine to the simple ramjet allows a compressor to generate high-pressure air so that the gas turbine jet engine can be started from a resting, or static, position. This is the secret of the modern gas turbine jet engine, which still relies on the ejection of hot gases to produce thrust. Until the turbine and compressor are functioning and delivering high-pressure air to the engine, however, the engine cannot start. Even gas turbine jet engines, therefore, must be started with a starting motor.



Show the cadets a slide or handout of the CT-114 Tutor turbojet engine application Figures A-7 and A-8.

A gas turbine jet engine that provides thrust, with no rotating shaft output, is a TURBOJET engine.



Show the cadets a slide or handouts of the C-130 Hercules turboprop engine application Figures A-9 and A-10.

A gas turbine jet engine that provides thrust and also drives a propeller is a TURBOPROP engine.



Show the cadets a slide or handout of the CH-146 Griffon turboshaft engine application Figures A-11 and A-12.

A gas turbine engine that drives a helicopter rotor is usually a TURBOSHAFT engine. In a turboshaft helicopter engine, the output driveshaft is separate from the compressor turbine shaft so that engine speed is not tied to the helicopter's main rotor speed.



Show the cadets a slide or handout of the CC-150 Polaris (A310-300 Airbus) turbofan engine application Figures A-5 and A-6. Point out the fan location.

The most common variation of the gas turbine jet engine is the TURBOFAN, which is a hybrid of a turbojet and a turboprop. The turbofan has a fan that provides thrust with bypass air, in place of a propeller, adding to the reactive thrust of the ejected exhaust gases. This application allows the aircraft to go faster than normal propellers could go, while also reducing engine noise and allowing the aircraft to make efficient use of fuel. The noise reduction and fuel efficiency of turbofans make them very effective for commercial aviation.

Unofficial convenience copy of A-CR-CCP-802/PF-001, cached 2026-11-08 from https://app.cadets.gc.ca/cadet-publications/A-CR-CCP-802-PF-001/A-CR-CCP-802-PF-001.pdf.
Verify against the official publication.



All three of these engine types, rocket, gas turbine jet and piston-powered engines, use internal combustion to capture the energy of expanding hot gases in a closed container.

CONFIRMATION OF TEACHING POINT 1

QUESTIONS

Q1. Which engine type was the first to be used for propulsion?

Q2. Why are the rocket, gas-turbine and piston-powered engines all internal combustion engines?

Q3. Why does a gas turbine jet engine need to have a starting motor?

ANTICIPATED ANSWERS

A1. The rocket was the first to be used for propulsion.

A2. The rocket, gas-turbine and piston-powered engines all use internal combustion to capture the energy of hot expanding gases in a closed container.

A3. A gas turbine jet engine needs to have a starting motor because, until the turbine and compressor are running, there is no high-pressure air to operate the engine.

Teaching point 2 **Explain Combustion in Rocket, Gas Turbine and Piston-powered Engines**

Time: 5 min Method: Interactive Lecture

All rocket, jet and piston-powered engines are internal-combustion engines because they all use burning fuel to generate power from expanding gases in a closed container. However, all these engine systems have important differences that distinguish them from one another.



Show the cadets a slide or handouts of combustion in Figure B-1.

When fuel is oxidized it gives off heat. The heat causes expansion of the gases that result from the oxidization. If oxidization is very slow it is usually referred to simply as oxidization, or rusting. If the oxidization is faster, it is often referred to as burning. If it is very rapid, it is referred to as an explosion. All these processes result from fuel chemically combining with oxygen. The distinguishing characteristic between them is the speed of molecular combination.



Show the cadets a slide or handout of combustion locations in Figures B-2 and B-3.

By capturing the expanding hot gases of combustion in a tightly closed container, such as a piston-powered engine’s combustion chamber or a gas-turbine jet engine’s combustor, the energy of the hot gases can be put

Unofficial convenience copy of A-CR-CCP-802/PF-001, cached 2026-11-08 from https://app.cadets.gc.ca/cadet-publications/A-CR-CCP-802-PF-001/A-CR-CCP-802-PF-001.pdf.
Verify against the official publication.

to useful work. All the engine types discussed here contain the energy of expanding gases in a tight closed container, so all are said to be internal-combustion engines.

There have been many methods developed that direct and transmit this power. The most common is the turning of a shaft, such as a turbine shaft or a crankshaft. That shaft can then be used to turn an aircraft's propeller, the impellor of an air compressor, or an automobile's wheels.



A rocket applies the energy of the combustion's expanding gases in the most direct manner, by simply ejecting them to get the equal and opposite reaction. Gas-turbine and piston-powered engines apply the energy indirectly through moving machinery.

CONFIRMATION OF TEACHING POINT 2

QUESTIONS

Q1. What causes burning gases to expand?

Q2. What is the difference between fuel burning and fuel exploding?

Q3. Which engine type applies the energy of expanding gases in the most direct manner?

ANTICIPATED ANSWERS

A1. The heat of combustion causes the gases to expand.

A2. The difference between burning and exploding is the speed of oxidization.

A3. The rocket applies the energy of expanding gases in the most direct manner.

Teaching point 3 **Explain the Oxidization Process for Different Types of Engines**

Time: 5 min Method: Interactive Lecture

The simplest system of combining fuel with oxygen is the self-contained system of the rocket and the most intricate is the internal combustion engine, with gas turbine jets between those extremes.

The rocket carries its own fuel and oxygen and combines them in a closed container at a rate that will generate the energy needed at any given moment. Of course, the rocket will have to start out with enough oxygen to finish the mission, since it cannot get more from outside its closed container. So, the fuel and the oxygen must be carefully calculated and loaded before launch. The hot expanding gases that result from an explosion in the rocket's combustor are blasted out the back of the rocket at high speed through a nozzle. The nozzle applies the equal and opposite reaction of the moving gases to the body of the rocket, propelling it upward.



A jet engine is similar to a rocket engine but, because a jet engine uses air for oxidization, it must allow for the fact that air is mostly nitrogen and only about 20 percent oxygen. Therefore, obtaining enough oxygen for efficient combustion in a jet engine requires that air be somehow compressed before combustion takes place.

A gas turbine jet engine typically resembles a hollow cylinder with air sucked in the front and blasted out the back. These can be seen slung under the wing of most airliners. The fuel to be burned is stored in tanks, often in the aircraft's wing. The air, which is sucked by a compressor fan into the front of the engine, contains the oxygen that is needed for oxidization of the fuel. The fuel is combined or mixed with the pressurized air and

Unofficial convenience copy of A-CR-CCP-802/PF-001, cached 2026-11-08 from https://app.cadets.gc.ca/cadet-publications/A-CR-CCP-802-PF-001/A-CR-CCP-802-PF-001.pdf.
Verify against the official publication.

the mixture is detonated in a container within the engine called a combustor. As in a rocket, the hot expanding gases are blasted out the back of the engine through a nozzle that applies the equal and opposite reaction of the moving gases to the body of the engine, propelling it forward. Significant in this is the presence of a turbine beside the combustor, which uses a portion of the hot expanding gases to spin a shaft. That shaft drives the compressor fan to suck the air into the engine. This system of generating propulsion power has proven so useful and reliable that many variations of the basic theme have been developed and given names such as “fan-jet”, “turboprop” and “turboshaft”.



Specialized gas-turbine applications are explored in complementary lessons of Proficiency Level Two.

The most intricate method of generating power by oxidizing fuel is the most common. The reciprocating piston-powered engine is encountered in many applications. In a four-stroke piston-powered engine, air is carefully mixed with atomized fuel droplets and then either sucked or injected into cylinders where the mixture is detonated to drive pistons in a cycle of intake, compression, power, and exhaust. These cycles will be examined in EO M232.03 (Participate in a Discussion on the Cycles of a Four-Stroke Piston-Powered Engine).

CONFIRMATION OF TEACHING POINT 3

QUESTIONS

Q1. Where does a rocket get oxygen to burn fuel in outer space?

Q2. What is used to spin the turbine in a gas-turbine engine?

Q3. Where does a jet engine, such as a gas-turbine, get oxygen to burn fuel?

ANTICIPATED ANSWERS

A1. A rocket carries its own oxygen in addition to its fuel.

A2. A portion of the hot expanding gases from the engine’s combustor is used to spin the turbine.

A3. Air entering the front of the engine contains oxygen that is used for oxidization of fuel.

Teaching point 4 **Identify Aircraft and Associated Engine Types**

Time: 5 min Method: Interactive Lecture



Show the cadets slides or handouts, located at Annex A, of the following aircraft pictures and, in each case, ask the cadets to identify the aircraft. Then, tell the cadets the aircraft’s engine type and ask the cadets to consider the following points:

Unofficial convenience copy of A-CR-CCP-802/PF-001, cached 2026-11-08 from https://app.cadets.gc.ca/cadet-publications/A-CR-CCP-802-PF-001/A-CR-CCP-802-PF-001.pdf.
Verify against the official publication.

Figure A-9 C-130 Hercules: four Alison T-56-A-7/15 turboprop engines.

Engine type is selected for the anticipated mission, so why does the C-130 Hercules in Figure A-9 have turboprops?

Today, the distinction between tactical airlift and strategic airlift depends not so much on the number of a transport aircraft's engines as on their type: jet-engine aircraft are generally seen as "strategic", while turboprop-powered (and therefore slower and shorter-ranged) aircraft are "tactical". Tactical transports are also usually designed to operate on rougher, shorter, more primitive airfields than the facilities required by strategic transports.

Figure A-5 CC-150 Polaris: two General Electric CF6-80C2A2 turbofan engines.

What is the main purpose of the CC-150 Polaris?

This strategic lift aircraft's primary role is long-range transport of personnel and equipment, up to 194 passengers or 32 000 kg of cargo. They have participated in operations supporting the CF, NATO and numerous UN and Red Cross initiatives.

Figure A-3 Harvard North American T-6J: one nine-cylinder Pratt & Whitney radial engine.

What is happening in Figure A-3?

Harvard number 20449 was a North American T-6J, one of the last of 270 such aircraft taken on strength by the RCAF in November, 1951. It was assigned to No. 1 Flying Instructors School which had been reformed at RCAF Station Trenton, Ontario on April 1, 1951. It then followed the school as it moved to RCAF Station Moose Jaw on June 8, 1959 where the school still exists today as Canadian Forces Flying Instructors School. The training aircraft was then upgraded from the Harvard to the Canadair CT-114 Tutor. The aerobatic display team of the 1950s was the Golden Hawks. The flying instructors so disparaged their former students' efforts that they formed their own team, the Goldilocks, with the Harvard training aircraft, showing what they thought of their students' formation-flying abilities.

Figure A-7 CT-114 Tutor: one General Electric J85-CAN-40 turbo jet engine.

Figure A-7 looks familiar. Where have we seen that aircraft before?

When the Snowbirds, Canada's world famous aerial acrobatic team, perform high above the clouds, their Canadair CT-114 Tutors are put through their paces. The Tutor, a Canadian designed and produced single-engine subsonic jet trainer that entered service in the mid-1960s, was used for basic and advanced pilot training until it was replaced by the CT-156 Harvard II and CT-155 Hawk in 2000.

Figure A-11 CH-146 Griffon: one Pratt & Whitney PT6T-3D turboshaft engine.

What is a Griffon used for?

As Canada's Utility Transport Tactical Helicopter (UTTH), the Griffon provides a robust, reliable and cost-effective capability to conduct: airlift of equipment and personnel, command and liaison flights, surveillance and reconnaissance, casualty evacuation, logistic transport, search and rescue, counter-drug operations, and domestic relief operations.

CONFIRMATION OF TEACHING POINT 4

The cadets' participation in the aircraft identification will serve as the confirmation of this TP.

Unofficial convenience copy of A-CR-CCP-802/PF-001, cached 2026-11-08 from https://app.cadets.gc.ca/cadet-publications/A-CR-CCP-802-PF-001/A-CR-CCP-802-PF-001.pdf.
Verify against the official publication.

END OF LESSON CONFIRMATION

QUESTIONS

Q1. Why are the rocket, gas-turbine and piston-powered engines all internal combustion engines?

Q2. What is used to spin the turbine in a gas-turbine engine?

Q3. What causes burning gases to expand?

ANTICIPATED ANSWERS

A1. The rocket, gas-turbine and piston-powered engines all use internal combustion to capture the energy of hot expanding gases in a closed container.

A2. A portion of the hot expanding gases from the engine's combustor is used to spin the turbine.

A3. The heat of combustion causes the gases to expand.

CONCLUSION

HOMEWORK/READING/PRACTICE

N/A.

METHOD OF EVALUATION

N/A.

CLOSING STATEMENT

The topic of aircraft engines is very broad and ever-changing as new solutions are found and new products developed to push the performance envelope.

INSTRUCTOR NOTES/REMARKS

If a computer and projector are available, software to demonstrate engine operation can be found at the Websites listed below.

REFERENCES

A3-031 Canadian Forces. *Aircraft.* (2006). Retrieved 20 November 2006, from http://www.airforce.gc.ca/equip/equip1_e.asp.

C3-084 NASA Glenn Research Center. *Engines 101.* Retrieved 21 February 2007, from http://www.ueet.nasa.gov/Engines101.html#Aeronautics.

C3-086 NASA Glenn Research Center. *Engines 101.* Retrieved 21 February 2007, from http://www.grc.nasa.gov/WWW/K-12/airplane/icengine.html.

C3-087 NASA Glenn Research Center. *Propulsion Index.* Retrieved 21 February 2007, from http://www.grc.nasa.gov/WWW/K-12/airplane/shortp.html.

C3-088 NASA. *Welcome to the Beginner's Guide to Rockets.* Retrieved 21 February 2007, from http://exploration.grc.nasa.gov/education/rocket/bgmr.html.

Unofficial convenience copy of A-CR-CCP-802/PF-001, cached 2026-11-08 from https://app.cadets.gc.ca/cadet-publications/A-CR-CCP-802-PF-001/A-CR-CCP-802-PF-001.pdf.
Verify against the official publication.

C3-116 A-CR-CCP-263/PT-001/(ISBN 0-9680390-5-7) MacDonald, A. F. and Peppler, I. L. (2000). *From the Ground Up: Millennium Edition.* Ottawa, ON: Aviation Publishers Co. Limited.

C3-120 Pratt & Whitney Canada. (2006). *Imagine the Power.* Retrieved 18 March 2007, from http://www.pwc.ca/en/3_0/3_0_3/3_0_3_3_1.asp.

C3-121 NASA. (2007). *Missions: Space Shuttle Main Engines.* Retrieved 18 March 2007, from http://www.nasa.gov/returntoflight/system/system_SSME.html.

Unofficial convenience copy of A-CR-CCP-802/PF-001, cached 2026-11-08 from https://app.cadets.gc.ca/cadet-publications/A-CR-CCP-802-PF-001/A-CR-CCP-802-PF-001.pdf.
Verify against the official publication.

THIS PAGE INTENTIONALLY LEFT BLANK

Unofficial convenience copy of A-CR-CCP-802/PF-001, cached 2026-11-08 from https://app.cadets.gc.ca/cadet-publications/A-CR-CCP-802-PF-001/A-CR-CCP-802-PF-001.pdf.
Verify against the official publication.

IDENTIFYING TYPES OF AIRCRAFT ENGINES

Rocket Engines



National Aeronautics and Space Administration (NASA), "Missions" Space Shuttle System (2006). Retrieved 17 March 2007, from http://www.nasa.gov/returntoflight/system/system_SSME.html

Figure A-1 Rocket Engine Application

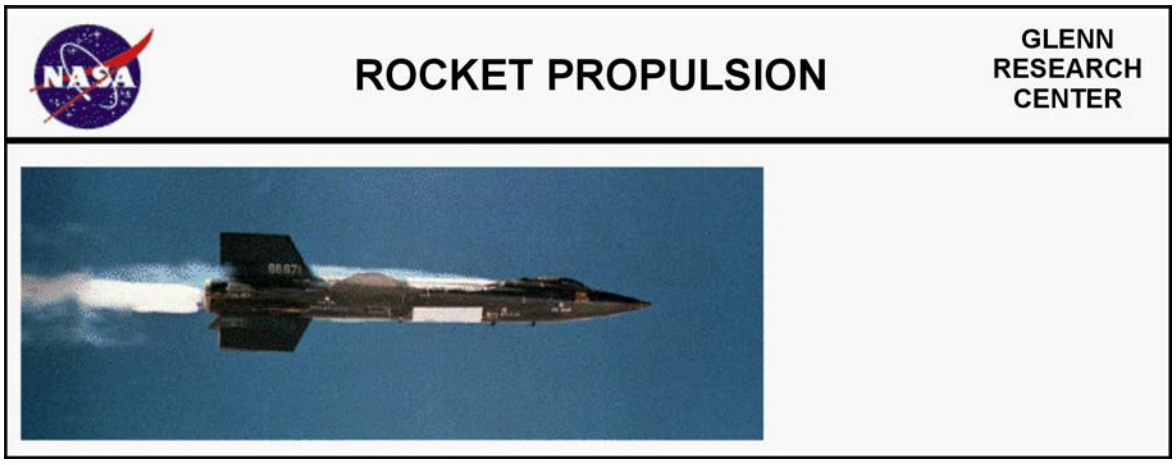

NASA Glenn Research Center. "Propulsion Index". Rocket Propulsion (2006). Retrieved 21 February 2007, from http://www.grc.nasa.gov/WWW/K-12/airplane/shortp.html

Figure A-2 X-15 in Flight

Unofficial convenience copy of A-CR-CCP-802/PF-001, cached 2026-11-08 from https://app.cadets.gc.ca/cadet-publications/A-CR-CCP-802-PF-001/A-CR-CCP-802-PF-001.pdf.
Verify against the official publication.

Piston-powered Engines



Canadian Forces. Aircraft. (2005). Retrieved 17 March 2007, from http://www.airforce.gc.ca/equip/equip1_e.asp

Figure A-3 Piston-powered Engine Application

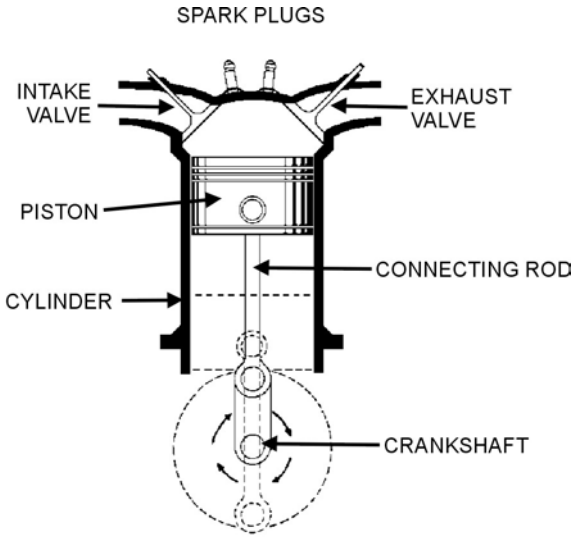

A-CR-CCP-263/PT-001 (p. 53)

Figure A-4 Piston-powered Engine Schematic

Unofficial convenience copy of A-CR-CCP-802/PF-001, cached 2026-11-08 from https://app.cadets.gc.ca/cadet-publications/A-CR-CCP-802-PF-001/A-CR-CCP-802-PF-001.pdf.
Verify against the official publication.

Jet Engine



Canadian Forces. Aircraft. (2005). Retrieved 17 March 2007, from http://www.airforce.gc.ca/equip/equip1_e.asp

Figure A-5 Gas Turbine Engine Application

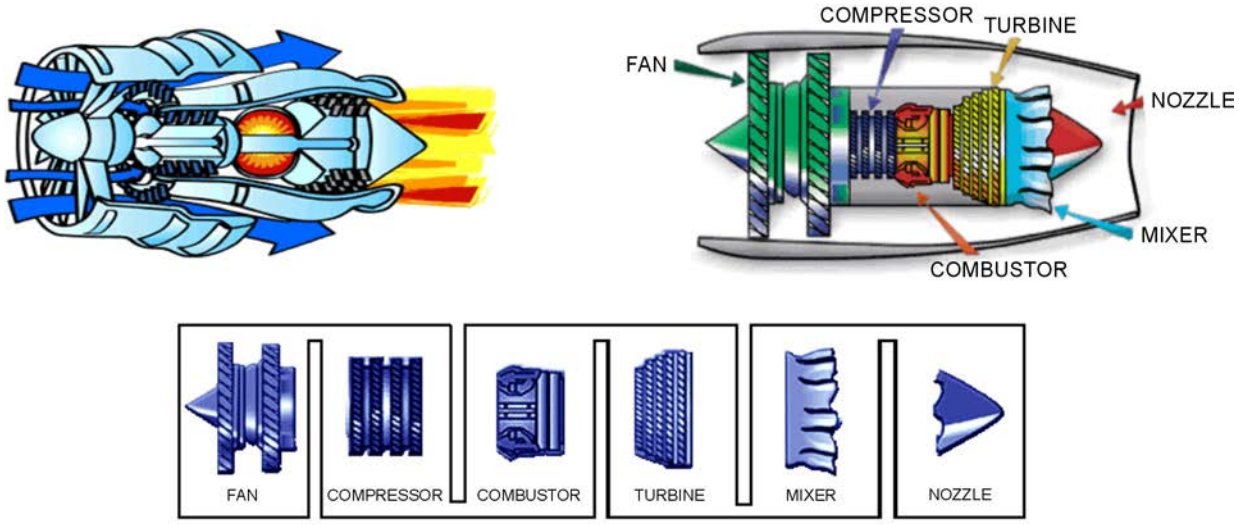

NASA "Engines 101". Ultra Efficient Engine Technology (UEET). (2001).
Retrieved 17 March 2007, from http://www.ueet.nasa.gov/Engines101.html

Figure A-6 Turbofan Parts

Unofficial convenience copy of A-CR-CCP-802/PF-001, cached 2026-11-08 from https://app.cadets.gc.ca/cadet-publications/A-CR-CCP-802-PF-001/A-CR-CCP-802-PF-001.pdf.
Verify against the official publication.

Turbojet Engines



Canadian Forces. Aircraft. (2005). Retrieved 17 March 2007, from http://www.airforce.gc.ca/equip/equip1_e.asp

Figure A-7 Turbojet Application

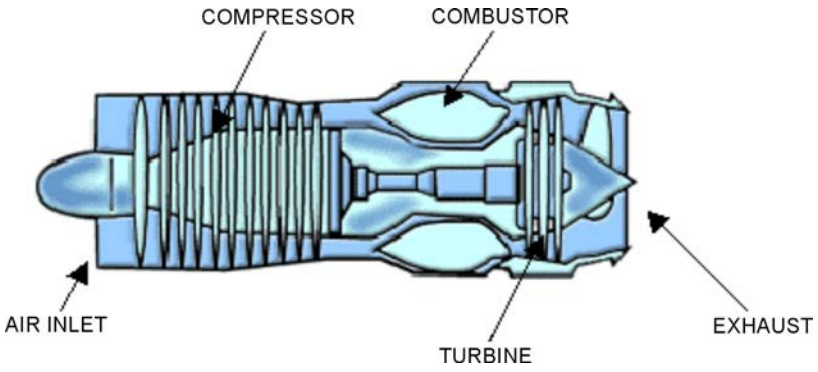

NASA Engines 101. Ultra Efficient Engine Technology (UEET). (2001). Retrieved 17 March 2007, from http://www.ueet.nasa.gov/Engines101.html

Figure A-8 Turbojet Schematic

Unofficial convenience copy of A-CR-CCP-802/PF-001, cached 2026-11-08 from https://app.cadets.gc.ca/cadet-publications/A-CR-CCP-802-PF-001/A-CR-CCP-802-PF-001.pdf.
Verify against the official publication.

Turboprop Engines



Canadian Forces. Aircraft. (2005). Retrieved 17 March 2007, from http://www.airforce.gc.ca/equip/equip1_e.asp

Figure A-9 Turboprop Application

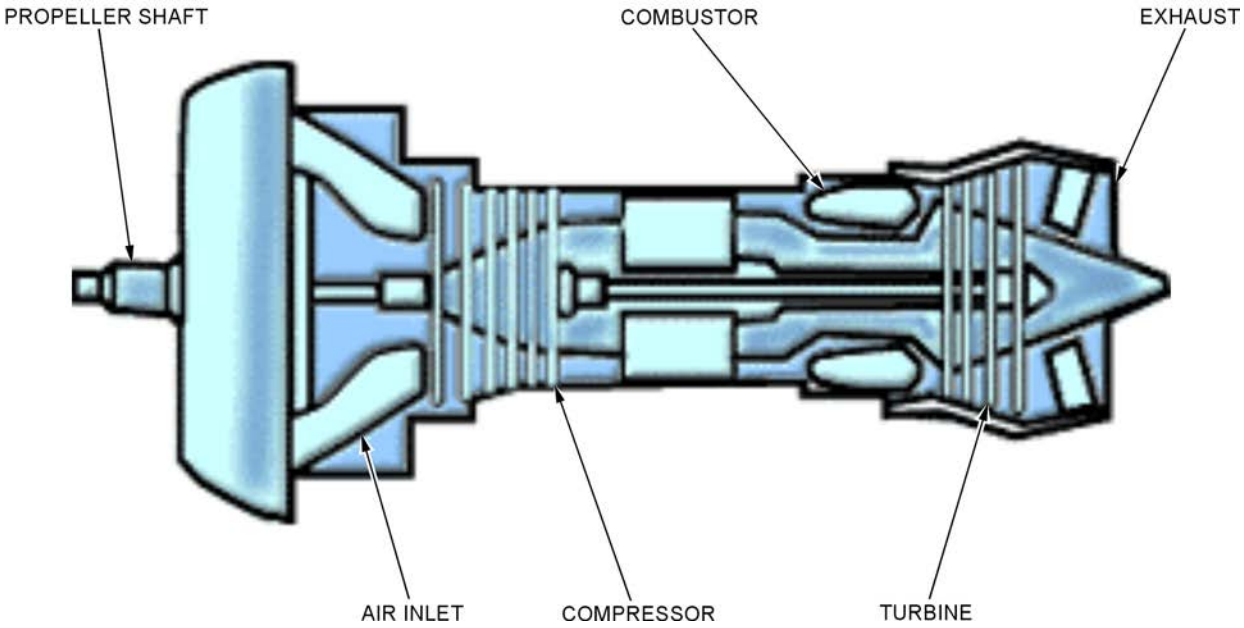

NASA Engines 101. Ultra Efficient Engine Technology (UEET). (2001). Retrieved 17 March 2007, from http://www.ueet.nasa.gov/Engines101.html

Figure A-10 Turboprop Engine Schematic

Unofficial convenience copy of A-CR-CCP-802/PF-001, cached 2026-11-08 from https://app.cadets.gc.ca/cadet-publications/A-CR-CCP-802-PF-001/A-CR-CCP-802-PF-001.pdf.
Verify against the official publication.

Turboshaft Engines



Canadian Forces. Aircraft. (2005). Retrieved 17 March 2007, from http://www.airforce.gc.ca/equip/equip1_e.asp

Figure A-11 Turboshaft Engine Application

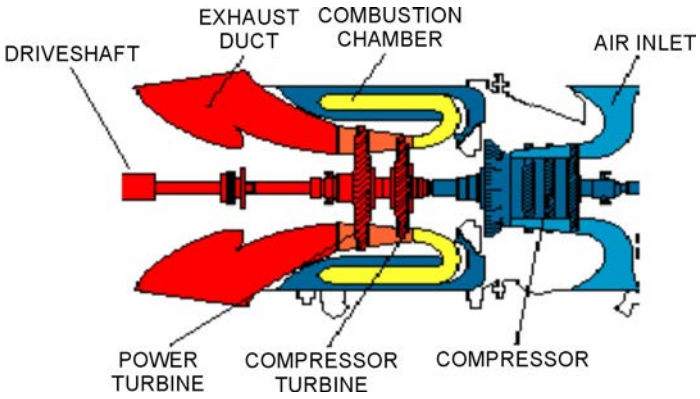

Imagine the Power, Pratt & Whitney Canada. Retrieved 16 March 2007, from http://www.pwc.ca/en/3_0/3_0_3/3_0_3_3_1.asp

Figure A-12 Turboshaft Engine Schematic

Unofficial convenience copy of A-CR-CCP-802/PF-001, cached 2026-11-08 from https://app.cadets.gc.ca/cadet-publications/A-CR-CCP-802-PF-001/A-CR-CCP-802-PF-001.pdf.
Verify against the official publication.

INTERNAL COMBUSTION

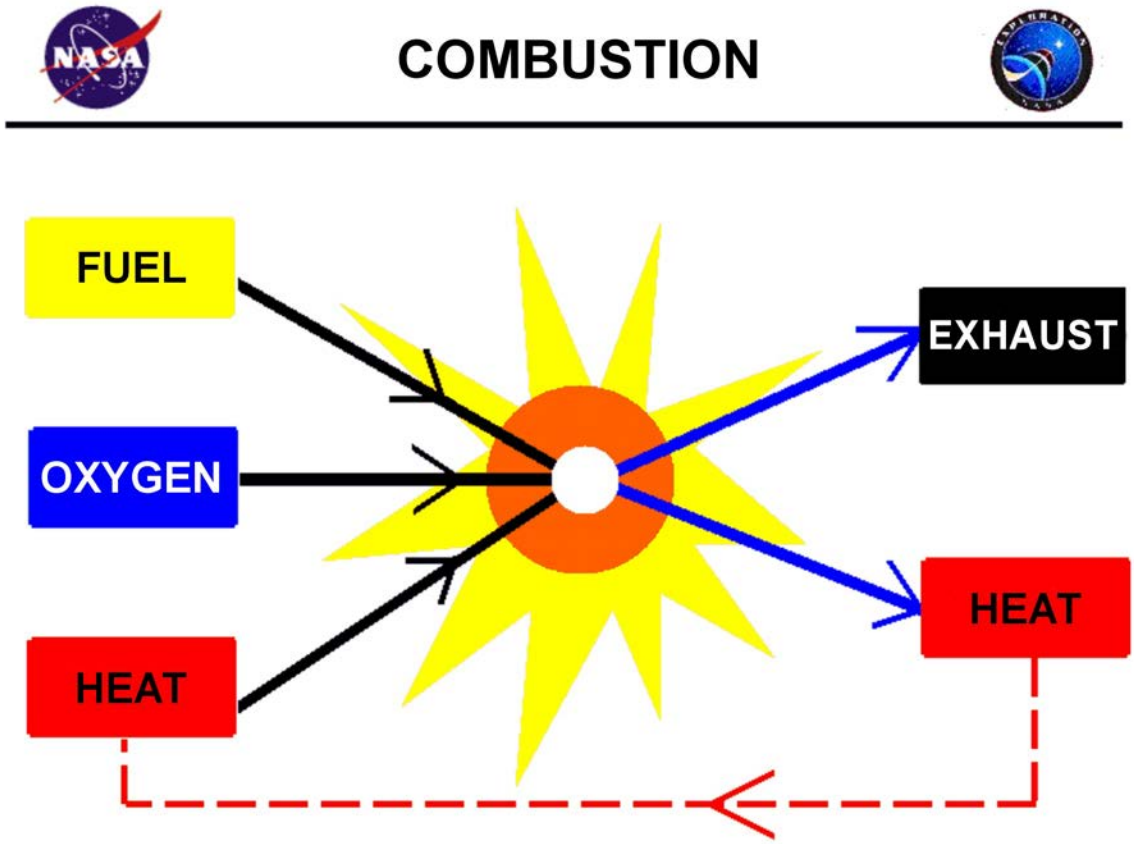

NASA Ultra Efficient Engine Technology (UEET). (2001). Retrieved 17 March 2007, from http://www.ueet.nasa.gov/Engines101.html

Figure B-1 Combustion

Unofficial convenience copy of A-CR-CCP-802/PF-001, cached 2026-11-08 from https://app.cadets.gc.ca/cadet-publications/A-CR-CCP-802-PF-001/A-CR-CCP-802-PF-001.pdf.
Verify against the official publication.

Location of Combustion

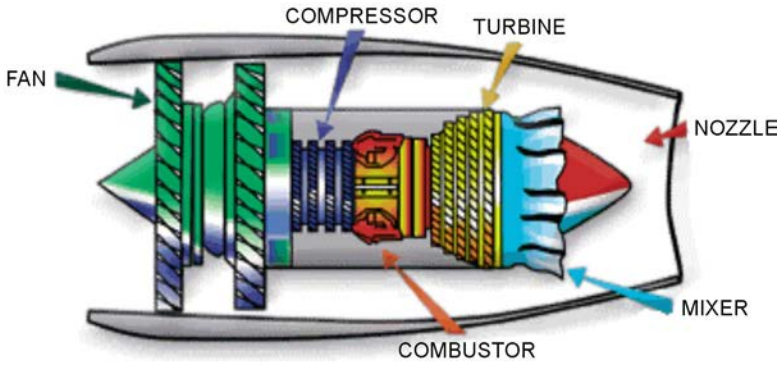

NASA Ultra Efficient Engine Technology (UEET). (2001). Retrieved 17 March 2007, from http://www.ueet.nasa.gov/Engines101.html

Figure B-2 Combustor Location in a Gas-turbine Engine

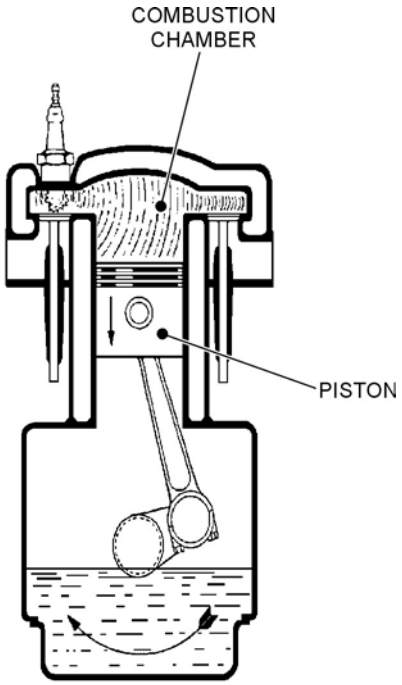

A-CR-CCP-263/PT-001 (p. 53)

Figure B-3 Combustion Chamber Location in a Piston-powered Engine

Unofficial convenience copy of A-CR-CCP-802/PF-001, cached 2026-11-08 from https://app.cadets.gc.ca/cadet-publications/A-CR-CCP-802-PF-001/A-CR-CCP-802-PF-001.pdf.
Verify against the official publication.