ROYAL CANADIAN AIR CADETS

PROFICIENCY LEVEL TWO

INSTRUCTIONAL GUIDE

SECTION 1

EO M231.01 – IDENTIFY THE FOUR FORCES THAT ACT UPON AN AIRCRAFT

Total Time: 60 min

PREPARATION

PRE-LESSON INSTRUCTIONS

Resources needed for the delivery of this lesson are listed in the lesson specification located in A-CR-CCP-802/PG-001, Chapter 4. Specific uses for said resources are identified throughout the Instructional Guide within the TP for which they are required.

Review the lesson content and become familiar with the material prior to delivering the lesson.

Make copies of the handouts located at Annexes A and C and slides/handouts of Figure B-1.

Create a simple paper glider from the instructions in Figure A-1 for demonstration purposes.

PRE-LESSON ASSIGNMENT

N/A.

APPROACH

An interactive lecture was chosen for TP1, TP2 and TP4 to TP7 to introduce the forces that act upon an aircraft and give an overview of them.

An in-class activity was chosen for TP3 as it is an interactive way to provoke thought and stimulate an interest among cadets.

INTRODUCTION

REVIEW

N/A.

OBJECTIVES

By the end of this lesson the cadet shall be expected to identify the four forces that act upon an aircraft.

IMPORTANCE

It is important for cadets to learn and identify the four forces that act upon an aircraft so that they will understand the principles of flight by which an aircraft operates.

Unofficial convenience copy of A-CR-CCP-802/PF-001, cached 2026-11-08 from https://app.cadets.gc.ca/cadet-publications/A-CR-CCP-802-PF-001/A-CR-CCP-802-PF-001.pdf.
Verify against the official publication.

Teaching point 1 **Explain That Every Aircraft Has Weight and That a Glider on Tow Gains Energy As It Gains Altitude**

Time: 5 min Method: Interactive Lecture

Every aircraft has weight, which influences the design and performance of the aircraft.



The weight of an aircraft is the force that acts vertically downward toward the centre of the Earth and is the result of gravity.

The gliders used in the Air Cadet gliding program are towed to their determined altitude by a tow-plane. There are other methods of getting altitude, such as using a winch to get up to speed on the ground.

An aircraft gains energy as it gains altitude. The energy that the glider gains as it is taken to its determined altitude can be spent quickly in a rapid descent to Earth or it can be spent slowly in a long descent.

CONFIRMATION OF TEACHING POINT 1

QUESTIONS

Q1. What causes an aircraft to have weight?

Q2. In what direction does weight and gravity act?

Q3. How do Air Cadet gliders get to their determined altitude?

ANTICIPATED ANSWERS

A1. Gravity.

A2. Vertically, downward toward the centre of the Earth.

A3. An Air Cadet glider is towed to altitude by a tow-plane.

Teaching point 2 **Explain That a Glider Experiences Drag From the Air as It Returns to the Earth After Being Released**

Time: 5 min Method: Interactive Lecture

Drag is the resistance that any object experiences as it moves through the air.

Cadets will have experienced the resistance of air on their bicycles or just walking on a windy day.

Effort is put into aircraft design to minimize drag.



Cadets avoid drag when they lower their head and shoulders on a bicycle to gain speed.

The design of an aircraft can minimize drag but cannot avoid it entirely. The faster an aircraft is designed to fly, the more sleek and streamlined its design is likely to be.

Unofficial convenience copy of A-CR-CCP-802/PF-001, cached 2026-11-08 from https://app.cadets.gc.ca/cadet-publications/A-CR-CCP-802-PF-001/A-CR-CCP-802-PF-001.pdf.
Verify against the official publication.

A parachute is designed to maximize drag by catching air and using it to slow descent.



An aircraft can use drag to control flight and manoeuvre by pushing on the passing air.

CONFIRMATION OF TEACHING POINT 2

QUESTIONS

Q1. What is drag?

Q2. How does a parachute use drag?

Q3. How does an aircraft use drag?

ANTICIPATED ANSWERS

A1. Drag is the resistance an object experiences as it moves through the air.

A2. A parachute is designed to maximize drag by catching air and using it to slow descent.

A3. An aircraft uses drag to control flight by pushing on the passing air.

Teaching point 3 **Fold and Fly a Simple Paper Glider**

Time: 15 min Method: In-Class Activity



During this activity, introduce the cadets to Newton's first law of motion, "an object in motion tends to stay in motion", with regard to aircraft.

ACTIVITY

OBJECTIVE

The objective of this activity is to have the cadets make a simple paper glider and then observe the effects of drag on it as it flies.

RESOURCES

- 8.5 x 11 inch paper, and
- Handouts of instructions for folding a simple paper glider located at Annex A.

ACTIVITY LAYOUT

N/A.

ACTIVITY INSTRUCTIONS

1. Give each cadet a single sheet of 8.5 x 11 inch paper and the instructions for folding, as shown in Figure A-1.

Unofficial convenience copy of A-CR-CCP-802/PF-001, cached 2026-11-08 from https://app.cadets.gc.ca/cadet-publications/A-CR-CCP-802-PF-001/A-CR-CCP-802-PF-001.pdf.
Verify against the official publication.

2. Each cadet will create a simple paper glider by folding the sheet of paper according to the instructions provided.

3. When directed, the cadets will gently release their gliders and observe them as they descend.

SAFETY

Adequate supervision will ensure that cadets release the simple paper gliders gently.

CONFIRMATION OF TEACHING POINT 3

The cadets' participation in folding and flying a simple paper glider will serve as the confirmation of TP3.

Teaching point 4 **Explain That a Descending Glider Converts the Energy of Raised Weight Into Forward Thrust by Acting Upon the Passing Air**

Time: 10 min Method: Interactive Lecture

As demonstrated in TP3, a glider moves forward as it descends, rather than falling straight down. It accomplishes this by acting on the air in a manner similar to a cadet diving into water.

A glider is always gliding downwards through the air, but by locating atmospheric lift (rising air) to offset the downward motion of the aircraft due to gravity, the pilot can actually gain altitude and fly great distances without needing to use artificial lift again.



Thrust is a force that moves an aircraft forward. A glider spends the energy it has gained and moves forward by trading the speed of descent for forward motion. It gets this control by using its weight to push upon the air below. With its nose lowered, it slides forward over the air below.

CONFIRMATION OF TEACHING POINT 4

QUESTIONS

Q1. In what direction does a glider always move through the air after being released?

Q2. What causes the glider to descend?

Q3. What causes the glider to move forward?

ANTICIPATED ANSWERS

A1. Downward, toward the centre of the Earth.

A2. Weight, resulting from gravity.

A3. Thrust, developed by spending energy, trades the speed of descent for forward motion.

Unofficial convenience copy of A-CR-CCP-802/PF-001, cached 2026-11-08 from https://app.cadets.gc.ca/cadet-publications/A-CR-CCP-802-PF-001/A-CR-CCP-802-PF-001.pdf.
Verify against the official publication.

Teaching point 5 — **Explain That a Glider's Wings Are Designed To Convert the Energy of the Glider's Descent From Downward Motion To Lift**

Time: 5 min — Method: Interactive Lecture

A glider's wings are designed to project out into the passing air. Glider's wings are usually very large for the size of aircraft because a glider depends on its wings to develop lift without help from an engine or a propeller. As air moves over and under the wing, the air is used by the wing to generate lift.

The purpose of a glider's wings is not to go fast to minimize descent. The object of soaring is to get as much forward distance as possible, while losing as little altitude as possible for each unit of energy that the glider loses in descent. The distance travelled forward compared to the altitude lost is referred to as glide ratio. This should be a very large number such as 30 metres forward for each metre of descent.

The glider's wing is designed to develop lift because lift reduces the rate of descent while allowing forward motion. The lift of the aircraft's wing will counteract the aircraft's weight, to a degree, and this will improve the aircraft's glide ratio. Generally, the larger the wing, the more lift can be developed.

A wing generates lift by acting upon the passing air in a highly sophisticated manner that will be explored in the next lesson.

CONFIRMATION OF TEACHING POINT 5

QUESTIONS

Q1. Why does a glider have large wings?

Q2. What is required for an aircraft wing to develop lift?

Q3. What is used to overcome the weight of an aircraft?

ANTICIPATED ANSWERS

A1. A glider depends upon its wings to develop lift without help from an engine.

A2. Air must move over and under the wing.

A3. Lift that is created by the aircraft's wing.

Teaching point 6 — **Explain That a Powered Aircraft Has Weight and, When in Flight, Also Experiences Drag, Thrust, and Lift**

Time: 10 min — Method: Interactive Lecture

A powered aircraft also experiences weight, drag and lift as does a glider. However, while a glider can gain forward motion only by trading the energy of its descent for thrust, a powered aircraft can generate thrust by running its engine. In this case, thrust is provided to the aircraft via a driven propeller or a high-speed jet exhaust.



Show the cadets a slide (OHP or PPT), or paper handouts, of the four forces that act upon an aircraft shown in Figure B-1.

Unofficial convenience copy of A-CR-CCP-802/PF-001, cached 2026-11-08 from https://app.cadets.gc.ca/cadet-publications/A-CR-CCP-802-PF-001/A-CR-CCP-802-PF-001.pdf.
Verify against the official publication.

On the other hand, the engine adds weight to the aircraft and both the propeller and engine body add to the drag that the aircraft experiences. A powered aircraft, therefore, will usually not have the high glide ratio of a glider.

A powered aircraft, though, can attain equilibrium, which is something a glider cannot do. Equilibrium is a condition where lift equals weight or thrust equals drag. Pilots often refer to this as flying straight and level.



- If lift is greater than weight, the aircraft will climb higher.
- If weight is greater than lift, the aircraft will descend.
- If thrust is greater than drag, the aircraft's forward speed will increase.
- If drag is greater than thrust, the aircraft's speed will decrease.

CONFIRMATION OF TEACHING POINT 6

QUESTIONS

Q1. What is aircraft equilibrium?

Q2. What is necessary for an aircraft to climb higher?

Q3. What is a downside of having an engine?

ANTICIPATED ANSWERS

A1. Equilibrium is the condition where lift equals weight or thrust equals drag.

A2. If lift is greater than weight, the aircraft will climb higher.

A3. An engine increases the aircraft's weight and often increases its drag.

Teaching point 7 **Explain That Thrust and Drag Allow an Aircraft To Fly by Overcoming Drag and Weight**

Time: 5 min Method: Interactive Lecture

A glider can fly even though it does not produce its own thrust. It can fly even though its weight is greater than its lift. However, in the Earth's gravity, its flight is limited by atmospheric conditions and the pilot's skill. On a day without wind, even the most skilful pilot will soon return to Earth after being released.



With a powered aircraft, descent can be delayed by turning the energy of burning fuel into thrust because thrust can then be turned into lift by the aircraft's wings.

CONFIRMATION OF TEACHING POINT 7

QUESTIONS

Q1. What are the four forces that act upon an aircraft?

Q2. What force can overcome weight?

Q3. What force can overcome both weight and drag?

Unofficial convenience copy of A-CR-CCP-802/PF-001, cached 2026-11-08 from https://app.cadets.gc.ca/cadet-publications/A-CR-CCP-802-PF-001/A-CR-CCP-802-PF-001.pdf.
Verify against the official publication.

ANTICIPATED ANSWERS

A1. Weight, drag, thrust and lift.

A2. Lift.

A3. Thrust, because thrust can be converted to lift by the aircraft's wings.

END OF LESSON CONFIRMATION

QUESTIONS

Q1. How must the four forces that act on an aircraft be arranged to achieve equilibrium?

Q2. In what direction does weight and gravity act?

Q3. What is required for an aircraft wing to develop lift?

ANTICIPATED ANSWERS

A1. Lift must equal weight and thrust must equal drag.

A2. Vertically, downward toward the centre of the Earth.

A3. Air must move over and under the wing.



Have each cadet fill in the names of the four forces that act upon an aircraft in the drawing located at Annex C.

CONCLUSION

HOMEWORK/READING/PRACTICE

N/A.

METHOD OF EVALUATION

N/A.

CLOSING STATEMENT

Gliders and powered aircraft are designed for different purposes but they each are subject to the forces of weight, drag, lift and thrust.

INSTRUCTOR NOTES/REMARKS

Advise the cadets that each of the concepts introduced in this lesson will be explored in following lessons.

REFERENCES

C3-017 (ISBN 1-895569-23-0) Schmidt, N. (1998). *Fabulous Paper Gliders.* New York, NY: Sterling Publishing.

C3-058 (ISBN 1-4027-3034-9) Schmidt, N. (2005). *Paper Creations Paper Airplanes.* New York, NY. Sterling Publishing.

Unofficial convenience copy of A-CR-CCP-802/PF-001, cached 2026-11-08 from https://app.cadets.gc.ca/cadet-publications/A-CR-CCP-802-PF-001/A-CR-CCP-802-PF-001.pdf.
Verify against the official publication.

C3-090 National Aeronautics and Space Administration (NASA). (2007). *Virtual Skies.* Retrieved 22 February 2007, from http://virtualskies.arc.nasa.gov/aeronautics/tutorial/intro.html.

C3-116 A-CR-CCP-263/PT-001/(ISBN 0-9680390-5-7) MacDonald, A. F. and Peppler, I. L. (2000). *From the Ground Up: Millennium Edition.* Ottawa, ON: Aviation Publishers Co. Limited.

Unofficial convenience copy of A-CR-CCP-802/PF-001, cached 2026-11-08 from https://app.cadets.gc.ca/cadet-publications/A-CR-CCP-802-PF-001/A-CR-CCP-802-PF-001.pdf.
Verify against the official publication.

PAPER AIRPLANE ASSEMBLY INSTRUCTIONS

1. Fold paper down the centre lengthwise.
2. Fold the two upper corners down to the centreline.
3. Fold the two folded corners down to the centreline.

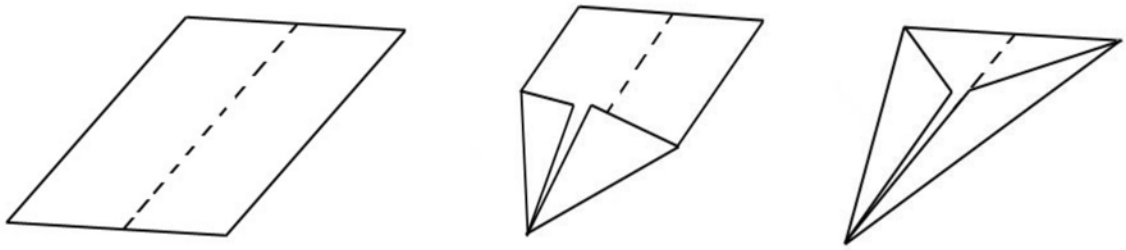

4. Fold the plane in half.
5. Fold one wing down, flip the plane over, and fold the other wing down.
6. Open the plane and fold the wing tips up.

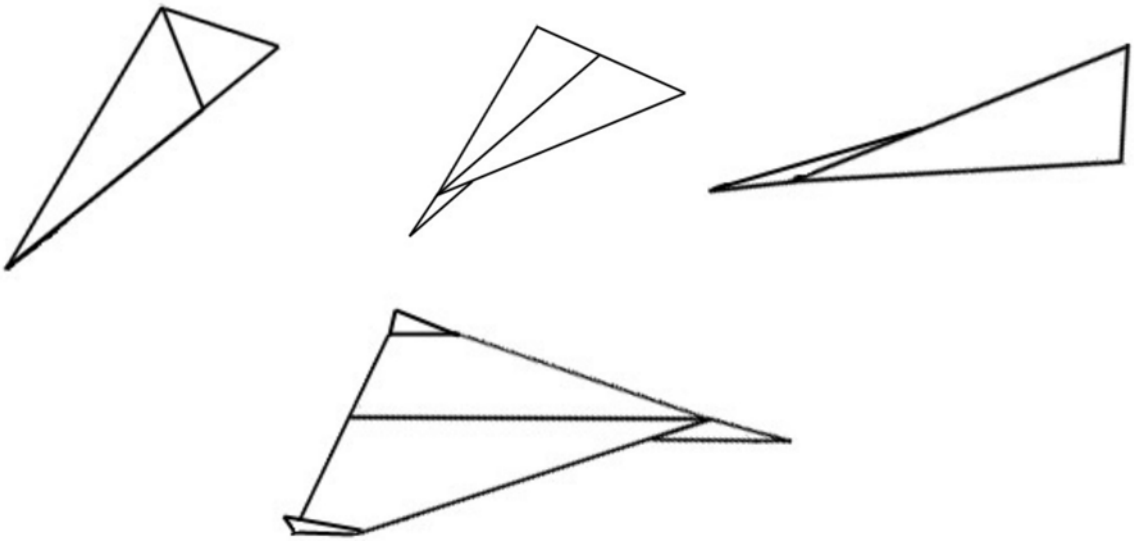

"NASAexplores", Express Lessons and Online Resources. Retrieved 7 March 2007, from http://www.nasaexplores.com/show_58_student_st.php?id=02123190203

Figure A-1 Paper Plane Assembly Instructions

Unofficial convenience copy of A-CR-CCP-802/PF-001, cached 2026-11-08 from https://app.cadets.gc.ca/cadet-publications/A-CR-CCP-802-PF-001/A-CR-CCP-802-PF-001.pdf.
Verify against the official publication.

THIS PAGE INTENTIONALLY LEFT BLANK

Unofficial convenience copy of A-CR-CCP-802/PF-001, cached 2026-11-08 from https://app.cadets.gc.ca/cadet-publications/A-CR-CCP-802-PF-001/A-CR-CCP-802-PF-001.pdf.
Verify against the official publication.

FOUR FORCES THAT ACT UPON AN AIRCRAFT

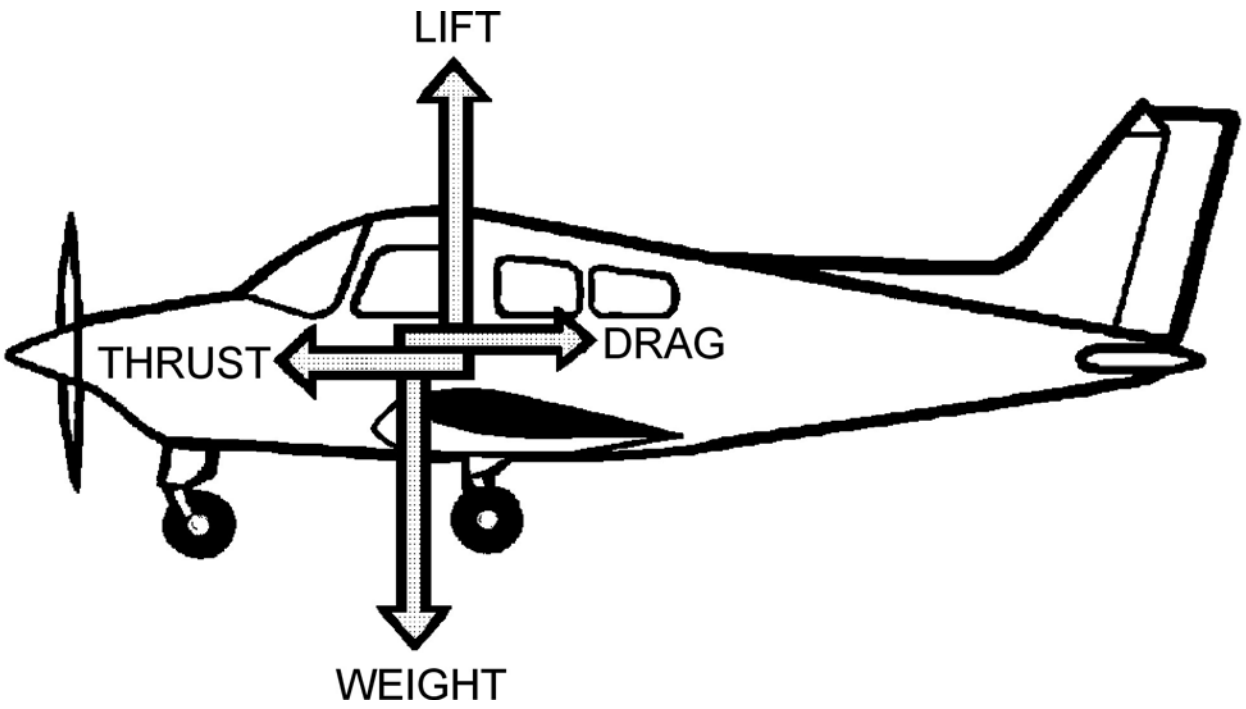

Cadets Canada: RCSU Pacific, 2007, Air Cadet Master Lesson Plans. Retrieved 7 March 2007, from http://www.regions.cadets.ca/pac/aircad/resources/mlp_air_e.asp

Figure B-1 The Four Forces That Act Upon an Aircraft

Unofficial convenience copy of A-CR-CCP-802/PF-001, cached 2026-11-08 from https://app.cadets.gc.ca/cadet-publications/A-CR-CCP-802-PF-001/A-CR-CCP-802-PF-001.pdf.
Verify against the official publication.

THIS PAGE INTENTIONALLY LEFT BLANK

Unofficial convenience copy of A-CR-CCP-802/PF-001, cached 2026-11-08 from https://app.cadets.gc.ca/cadet-publications/A-CR-CCP-802-PF-001/A-CR-CCP-802-PF-001.pdf.
Verify against the official publication.

IDENTIFYING THE FOUR FORCES THAT ACT UPON AN AIRCRAFT

FILL IN EACH OF THE FOUR FORCES NEXT TO THE ARROWS

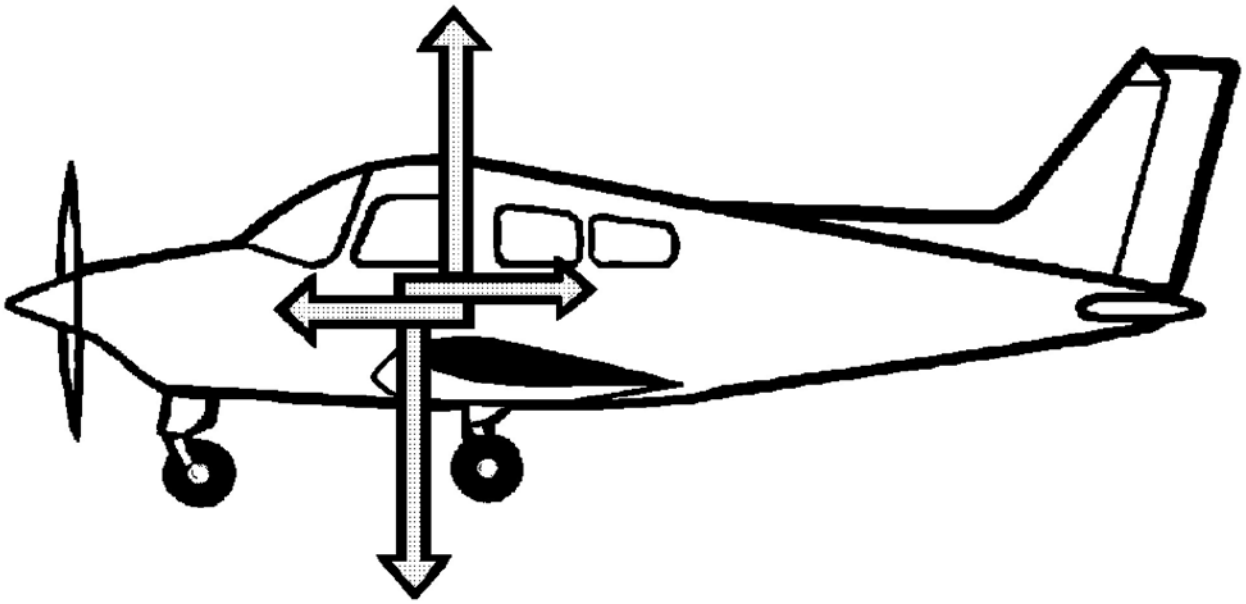

Cadets Canada: RCSU Pacific, 2007, Air Cadet Master Lesson Plans. Retrieved 7 March 2007, from http://www.regions.cadets.ca/pac/aircad/resources/mlp_air_e.asp

Figure C-1 Identifying the Four Forces That Act Upon an Aircraft

Unofficial convenience copy of A-CR-CCP-802/PF-001, cached 2026-11-08 from https://app.cadets.gc.ca/cadet-publications/A-CR-CCP-802-PF-001/A-CR-CCP-802-PF-001.pdf.
Verify against the official publication.

THIS PAGE INTENTIONALLY LEFT BLANK

Unofficial convenience copy of A-CR-CCP-802/PF-001, cached 2026-11-08 from https://app.cadets.gc.ca/cadet-publications/A-CR-CCP-802-PF-001/A-CR-CCP-802-PF-001.pdf.
Verify against the official publication.