COMMON TRAINING

INSTRUCTIONAL GUIDE

SECTION 1

EO M206.01 – PARTICIPATE IN A RECREATIONAL MARKSMANSHIP ACTIVITY USING THE CADET AIR RIFLE

Total Time: 90 min

PREPARATION

PRE-LESSON INSTRUCTIONS

Resources needed for the delivery of this lesson are listed in the lesson specification located in A-CR-CCP-802/PG-001, Chapter 4. Specific uses for said resources are identified throughout the Instructional Guide within the TP for which they are required.

Review the lesson content, and become familiar with the material, prior to delivery of the lesson. Set up air rifle range in accordance with Annex A.

Review Unit Standing Range Orders (see sample at Annex B).

Review and photocopy required targets and diagrams found in Annexes C to L.

Review the Cadet Air Rifle Handling Test in A-CR-CCP-811/PG-001, Chapter 3, Annex C.

PRE-LESSON ASSIGNMENT

N/A.

APPROACH

This interactive lecture was chosen for TP1 and TP2 to provide direction on procedures and to illustrate application of rules, principle and concepts.

The practical activity was selected for TP3 as an interactive setting to provide the cadets the experience of a recreational marksmanship air rifle activity in a safe and controlled environment. This recreational activity will contribute to creating and maintaining an interest the marksmanship program.

INTRODUCTION

REVIEW

The review for this lesson will be from EO M106.02 (Cadet Air Rifle Handling Test). Ensure all cadets have completed the Cadet Air Rifle Handling Test.

Unofficial convenience copy of A-CR-CCP-802/PF-001, cached 2026-11-08 from https://app.cadets.gc.ca/cadet-publications/A-CR-CCP-802-PF-001/A-CR-CCP-802-PF-001.pdf.
Verify against the official publication.

SUGGESTED QUESTIONS

Q1. Why do we follow safety regulations?

Q2. How would you verify the safety catch is ON?

Q3. What are the four “ACTS” of firearm safety?

ANTICIPATED ANSWERS

A1. To help prevent accidents with the cadet air rifle.

A2. No red can be seen.

A3. The mnemonic “ACTS” stands for:

- Assume every firearm is loaded;
- Control the muzzle direction at all times;
- Trigger finger must be kept off the trigger and out of the trigger guard; and
- See that the firearm is unloaded (prove it safe).

OBJECTIVES

By the end of this lesson, the cadets shall have participated in a recreational marksmanship activity using the cadet air rifle.

IMPORTANCE

It is important for cadets to practice the skills learned in PO 106. CA (Participate in a Familiarization Marksmanship Activity). This activity is essential for creating, developing and maintaining an interest in the cadet marksmanship program.

Teaching point 1 **Conduct a Range Briefing**

Time: 10 min Method: Interactive Lecture



Review the following information with the cadets.

REMOVING A RIFLE FROM THE CASE

The rifle case should be clearly marked on the outside with an arrow, indicating the direction the rifle inside is pointing. This will ensure that, when the case is opened, the rifle is pointing in a safe direction. The following steps must be followed when removing a rifle from its case:

1. Place the rifle case on a flat surface and ensure the arrow is pointing in a safe direction.
2. Open the case.
3. Cock the action (leave the bolt to the rear).
4. Confirm that the safety catch is ON.

Unofficial convenience copy of A-CR-CCP-802/PF-001, cached 2026-11-08 from https://app.cadets.gc.ca/cadet-publications/A-CR-CCP-802-PF-001/A-CR-CCP-802-PF-001.pdf.
Verify against the official publication.

5. Confirm that the pumping lever is partially open.
6. Slide the safety rod in the barrel towards the bolt until it can be seen in the feed track.
7. Remove the rifle from the case.
8. Remove the safety rod when you are on the firing line.

SAFETY CATCH AND SECURITY MEASURES

The safety catch is a mechanism that, once engaged, prevents a rifle from firing by locking its trigger in place. It is located just in front of the trigger, on the trigger guard. To engage the safety catch it must be pushed towards the right so no red can be seen. To fire, the safety catch must be pushed towards the left in the OFF position and a red mark must be seen on it. For maximum security, it is recommended that the safety catch be kept engaged until the rifle is ready for firing.

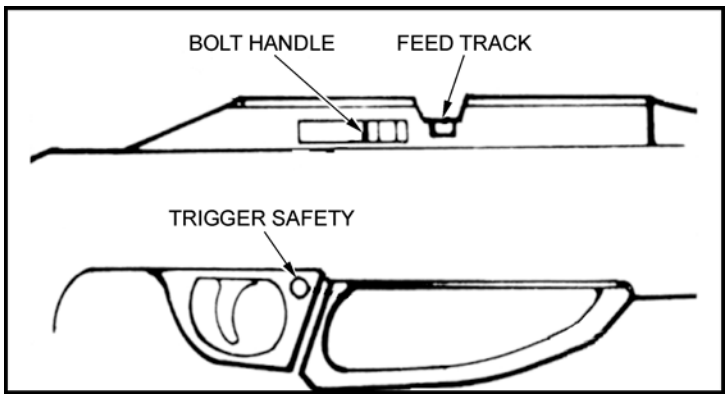

Daisy Outdoor Products, Operational Manual – Avanti Legend SX Model 853C, Daisy Outdoor Products

Figure 1 Safety Catch

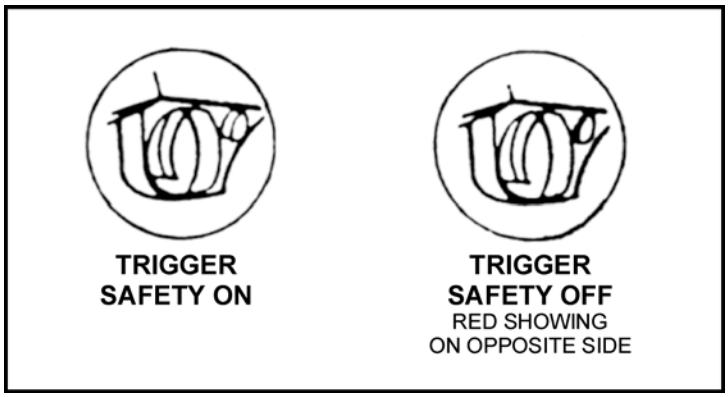

Daisy Outdoor Products, Operational Manual – Avanti Legend SX Model 853C, Daisy Outdoor Products

Figure 2 Safety Catch

SAFETY ROD

To ensure that air rifles are not removed from the firing point or stored with a pellet in the chamber or barrel, a safety rod is to be inserted in the barrel from the muzzle end. It consists of two (2) sections of doweling joined together in a “T” shape, and may be made of varying materials. Dimensions are detailed in the diagram below. The tip of the safety rod is to be coloured red so that it is visible in the feed track with the bolt fully to the rear.

Unofficial convenience copy of A-CR-CCP-802/PF-001, cached 2026-11-08 from https://app.cadets.gc.ca/cadet-publications/A-CR-CCP-802-PF-001/A-CR-CCP-802-PF-001.pdf.
Verify against the official publication.

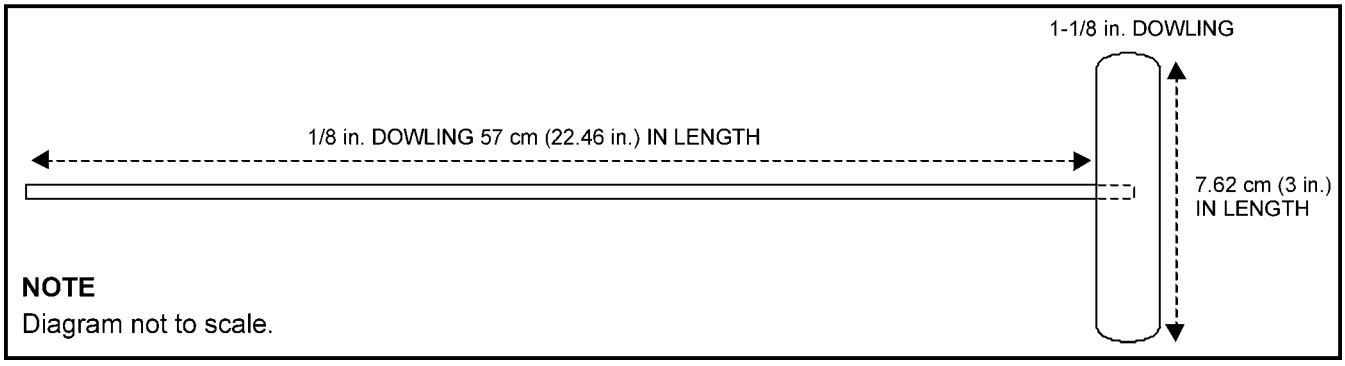

A-CR-CCP-177/PT-001, Canadian Cadet Movement: Cadet Marksmanship Program Reference Manual (p.1-3-1)

Figure 3 Safety Rod

INDIVIDUAL SAFETY PRECAUTIONS



Provide an explanation and demonstration proving the rifle safe.

Upon receiving a rifle, or when the “safe rifle status” is uncertain, individual safety precautions shall be done to confirm that the rifle is safe. An individual must ensure that:

- the bolt is open fully to the rear;
- the safety catch is in the ON position;
- the pump lever is left partially open; and
- a safety rod is placed in the barrel.

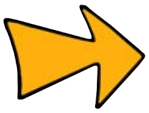

Have the cadets imitate the demonstration.

SAFETY

Maintain complete control at all times and ensure that all cadets treat the cadet air rifles as though it was loaded at all times.

Ensure that the demonstration is conducted in a safe manner, in a safe direction and away from others.

CONFIRMATION OF TEACHING POINT 1

QUESTIONS

Q1. Why is it important to leave your fingers off the trigger until ready to fire?

Q2. When storing the rifle in its case, is the bolt left forward (opened) or back (closed)?

Q3. Where is the safety catch located on the cadet air rifle?

Unofficial convenience copy of A-CR-CCP-802/PF-001, cached 2026-11-08 from https://app.cadets.gc.ca/cadet-publications/A-CR-CCP-802-PF-001/A-CR-CCP-802-PF-001.pdf.
Verify against the official publication.

ANTICIPATED ANSWERS

A1. To prevent accidental discharge of a pellet.

A2. When the rifle is being stored in its case, the bolt is always left foreword.

A3. Within the trigger guard, forward of the trigger.

Teaching point 2 **Explain Rules and Range Commands**

Time: 15 min Method: Interactive Lecture



Review range commands with an explanation and demonstration for each command.

All loading/firing is to be simulated. No pellets are to be fired.

RANGE COMMANDS CADETS MUST FOLLOW

Command	Action To Be Taken
Cover off your firing point	Stand up, move behind the firing point and await further commands.
Place your equipment down and stand back	Lay the equipment down on the mat and stand back when finished.
Adopt the prone position	Adopt the prone position, pick up the rifle, ready the equipment and put on hearing and eye protection.
Type of firing – "G.R.I.T."	"G.R.I.T" is the acronym for: • Group (relay); • Range (distance); • Indication (number of rounds); and • Type (grouping, scored).
Relay, load, commence firing	1. Pick up and hold the rifle with the left hand. 2. Ensure the safety catch is in the ON position. 3. Pump the rifle, observing a 3 second pause. 4. Load a pellet (flat end forward). 5. Close the bolt.

Unofficial convenience copy of A-CR-CCP-802/PF-001, cached 2026-11-08 from https://app.cadets.gc.ca/cadet-publications/A-CR-CCP-802-PF-001/A-CR-CCP-802-PF-001.pdf.
Verify against the official publication.

Command	Action To Be Taken
Relay, fire	1. Place the safety catch in the OFF position. 2. Aim the rifle at the target. 3. Squeeze the trigger. 4. Open the bolt. 5. Repeat the sequence for each shot. 6. Place the safety in the ON position. 7. Partially open the pump lever. 8. Lay down the rifle.

ACTIVITY LAYOUT

As illustrated in Figure A-1 for Range Layout Diagram.

ACTIVITY INSTRUCTIONS

Conduct a recreational marksmanship activity according to the instructions in Annexes C to L.

SAFETY

All standard range safety procedures will apply in accordance with Local Range Standing Orders.

CONFIRMATION OF TEACHING POINT 2

The cadets' participation in the recreational marksmanship activity will serve as confirmation of this TP.

Teaching point 3 **Participate in a Recreational Marksmanship Activity**

Time: 60 min Method: Performance

ACTIVITY

OBJECTIVE

The objective of this recreational marksmanship activity is to stimulate an interest in marksmanship in the Canadian Cadet Movement (CCM).

RESOURCES

- Cadet air rifles,
- Cadet air rifle safety rods,
- Safety glasses/goggles,
- Targets,
- Pellets (70 per cadet),
- Cleaning Pellets (11 per cadet),
- Pellet receptacle,
- Shooting mats (one per firing lane),

Unofficial convenience copy of A-CR-CCP-802/PF-001, cached 2026-11-08 from https://app.cadets.gc.ca/cadet-publications/A-CR-CCP-802-PF-001/A-CR-CCP-802-PF-001.pdf.
Verify against the official publication.

- Marking devices to record names on targets,
- Grouping template,
- Scoring template,
- Scoring Magnifier (e.g. Eagle Eye),
- Spotting scope with tripod,
- Thumb tacks/tape,
- Target frames/back stops,
- Red and green range flags, and
- Hand washing facilities.

ACTIVITY LAYOUT

As illustrated in Figure A-1 for Range Layout Diagram.



For detailed specifications refer to A-CR-CCP-177/PT-001.

ACTIVITY INSTRUCTIONS

Conduct a recreational marksmanship activity according to the instructions located at Annex C.

SAFETY

All standard range safety procedures will apply in accordance with Local Range Standing Orders.

CONFIRMATION OF TEACHING POINT 3

The cadets' participation in the marksmanship activity will serve as confirmation of this TP.

END OF LESSON CONFIRMATION

Confirmation of this lesson is inherent in the cadets' participation in the recreational marksmanship activity.

CONCLUSION

HOMEWORK/READING/PRACTICE

N/A.

METHOD OF EVALUATION

N/A.

CLOSING STATEMENT

In order to become more familiar with the cadet air rifle, and participate in a recreational marksmanship activity, cadets are provided a fun and safe way to practice their marksmanship skills.

Unofficial convenience copy of A-CR-CCP-802/PF-001, cached 2026-11-08 from https://app.cadets.gc.ca/cadet-publications/A-CR-CCP-802-PF-001/A-CR-CCP-802-PF-001.pdf.
Verify against the official publication.

INSTRUCTOR NOTES/REMARKS

Cadets are allowed to view their targets after they have been scored; the RSO will then select the targets that may qualify for marksmanship qualification levels, if applicable.

REFERENCES

A0-027 A-CR-CCP-177/PT-001 D Cdts (2001). *Canadian Cadet Movement: Cadet Marksmanship Program Reference Manual.* Ottawa ON: Department of National Defence.

A0-028 CATO 14-41 D Cdts (2005). *Annex E Appendix 1 Marksmanship, Rifles, and Ammunitions.* (Vol 1, 8 pages). Ottawa ON: Department of National Defence.

C0-085 Daisy Outdoor Products (2006). *Operational Manual – Avanti Legend EX Model 853C.* Rogers, AR: Daisy Outdoor Products.

Unofficial convenience copy of A-CR-CCP-802/PF-001, cached 2026-11-08 from https://app.cadets.gc.ca/cadet-publications/A-CR-CCP-802-PF-001/A-CR-CCP-802-PF-001.pdf.
Verify against the official publication.

RANGE LAYOUT DIAGRAM

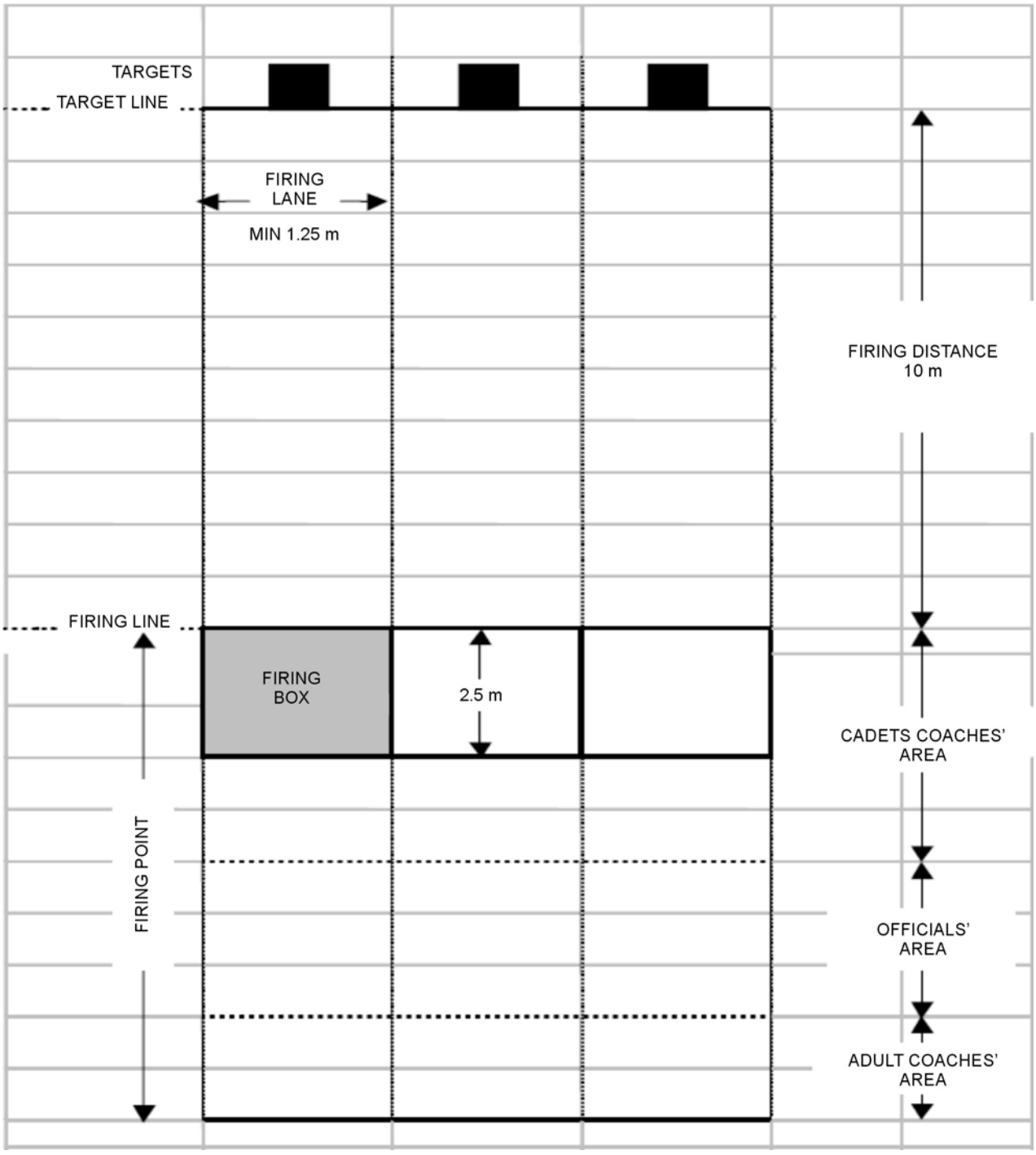

A-CR-CCP-177/PT-001 (p. 4-4-16)

Figure A-1 Air Rifle Range Layout

Unofficial convenience copy of A-CR-CCP-802/PF-001, cached 2026-11-08 from https://app.cadets.gc.ca/cadet-publications/A-CR-CCP-802-PF-001/A-CR-CCP-802-PF-001.pdf.
Verify against the official publication.

THIS PAGE INTENTIONALLY LEFT BLANK

Unofficial convenience copy of A-CR-CCP-802/PF-001, cached 2026-11-08 from https://app.cadets.gc.ca/cadet-publications/A-CR-CCP-802-PF-001/A-CR-CCP-802-PF-001.pdf.
Verify against the official publication.

SAMPLE RANGE STANDING ORDERS

GENERAL

These Range Standing Orders shall apply to all personnel participating in any air rifle firing conducted on a 10-metre indoor **"Portable Indoor Air Rifle Range"**.

LOCATION

The 10-metre "Portable Indoor Air Rifle Range" is to be set up IAW A-CR-CCP-177/PT-001.

DESCRIPTION OF AN INDOOR RANGE

- The portable air rifle range is set-up and then dismantled once the activity is completed.
- Target stands used will be those provided by DND. Once the range practice is finished, they shall be neatly stored.
- Shooting mats/gym mats will be used on the firing line.
- A table and chairs may be set up behind the firing point to be used by range staff, ammunition, scoring, etc.
- The set-up of the range will be as illustrated in Figure A-1.
- In all cases, the firing distance will be 10 metres.
- Backstops (Hesin curtain/blankets) will be used to protect the back of the range. They will be set up so as to minimize damage to the walls and doors.
- The sides of the range will be indicated and access to those areas should be limited. There is no requirement for physical barriers in those areas.

DESCRIPTION OF BACKSTOPS (TARGET FRAMES)

Target frames for the prone position may be constructed of either wood frame with steel backer plates or wood frame with a ballistic nylon curtain (Herculite or other brand name) to catch the pellets. The size of the frames shall be large enough to accommodate two 10-metre air rifle targets (CCT2001AR853) horizontally or vertically. The target stands provided by RCSU and/or other authorized DND sources shall be the only ones used.

Biathlon air rifle falling plate targets (BT 100) may be attached to the target frame by fixing a piece of wooden material (1" by 6") to the frame and providing two screws to hang the BT 100 falling plate target.

Target frames for the standing position may be the frames described in part "a" provided that the frames are elevated to a height of 1.4 m to the centre of the target. Should a mechanical target retrievable pulley system be used, the system may be attached to the frame by fixing a piece of wooden material 1" by 6" to the frame to attach the pulley system. A means of counter balance must be used to prevent the frames from being pulled over due to the tension and strain of the pulley system. The frames should be clamped to a table or stand and weight in the form of concrete blocks be hung from the table to give the system stability.

Moving targets are prohibited.

When conducting air rifle training in any other position (kneeling and standing) the RSO shall ensure that the backstops provide adequate surface area to accommodate the target being used and stop stray pellets.

AIR RIFLES/PELLETS

Notwithstanding the limitations set out in CATO 14-41, *Marksmanship, Rifles and Ammunitions*, regarding the types of air rifles that may be used for approved cadet activities:

- **Air Rifles:**
    - Daisy 853-C Air Rifle

Unofficial convenience copy of A-CR-CCP-802/PF-001, cached 2026-11-08 from https://app.cadets.gc.ca/cadet-publications/A-CR-CCP-802-PF-001/A-CR-CCP-802-PF-001.pdf.
Verify against the official publication.

- Avanti 853-C Air Rifle

- **Pellets:** 4.56 mm (.177 cal) air rifle pellets as provided by DND.

RESTRICTIONS

When the air rifle range is in use, doors leading directly into the active range area shall be locked and a sign shall be posted indicating: **"Live air rifle range is in progress – DO NOT ENTER"**. The following are areas of concern:

- Main access doors should be secured from the inside. The RSO is to verify that the doors are locked and cannot be opened from the outside.
- All pellets fired must be directed towards the stop butts (target frames).

COMMUNICATIONS

All communication on this range shall be made verbally or with range signal flags. Depending on the size of the range a megaphone (loud hailer) may be necessary.

SUPERVISION AND RANGE SAFETY OFFICERS

A qualified Range Safety Officer (RSO) shall be appointed to conduct the range practice by the cadet squadron Commanding Officer. Furthermore, only those individuals who have a valid Air Rifle RSO certificate are authorized to supervise the range.

The RSO is responsible for all aspects of the range exercise.

The RSO is to ensure the range area is strictly controlled.

The RSO is to ensure that all personnel have been instructed in the safe use and operation of the air rifle being used prior to firing.

The RSO will carry out an inspection of the range area and equipment to ensure serviceability.

Adult coaches and cadet coaches are permitted on the range; however, they shall be under the control of the RSO and follow all range rules and etiquette.

RANGE CONTROL FLAGS/LIGHTS/SIGNS

To indicate the range is in use:

- Range Control Flags at the entrance to the range area. The flag will be **red** when firing practice is being conducted and **green** when no firing is taking place
- Warning signs to all entrances to the range area will be posted so that they are visible to anyone attempting to enter.

FIRING POSITIONS

These range standing orders apply to the prone position only.

MEDICAL REQUIREMENTS

During all range exercises a suitable first aid kit shall be available and if possible, a qualified first aid person present. All range users are to be familiar with the location and contents of the First Aid Kit.

All personnel on the range shall wear safety goggles, or their own prescription safety glasses IAW A-CR-CCP-177/PT-001.

Unofficial convenience copy of A-CR-CCP-802/PF-001, cached 2026-11-08 from https://app.cadets.gc.ca/cadet-publications/A-CR-CCP-802-PF-001/A-CR-CCP-802-PF-001.pdf.
Verify against the official publication.

EMERGENCY CEASE FIRE

The RSO will ensure that all personnel understand the method of signalling a “CEASE FIRE”.

Once a “CEASE FIRE” has been ordered, the rifle’s safety catch is to be applied and the finger is to be removed from the trigger. The rifle is to be placed down and cadets are to wait for further instructions.

EMERGENCY PROCEDURES

1. In the case of serious injury to personnel:

2. The OIC/RSO of the range exercise shall immediately order a “CEASE FIRE” and shut down the range. The appointed first aid person will administer first aid.

3. Contact by phone will be made to emergency services or 911, depending on your local area provider.

4. The cadet squadrons’ Commanding Officer and applicable SO2 shall be notified immediately in the event of any range related accident. If the Commanding Officer is not available, the RSO shall notify the next person in the cadet corps chain of command, including the escort officer.

5. An incident or accident report (CF98/CF 2299 as applicable) shall be completed and forwarded to the cadet squadrons ‘Commanding Officer.

6. Safety personnel (fire, ambulance, police) are to be notified prior to entering the building that a range exercise was in progress at the time of the emergency and evacuation of the building.

RANGE LIGHTING

If overhead lights are not adequate, additional lighting may be provided by means of halogen lamps. These lamps shall be protected from the impact and deflection of pellets and as well as positioned on both sides of each firing lane as not to be in the direct line of fire of the pellets.

TARGETS

Only 10 metre approved air rifle targets will be used. These include grouping or application targets.

Cadets are authorized to fire on any to the following targets:

- Geometric shapes or silhouettes,
- CCT2001AR853 Competition Targets,
- CCT2000GRTD Air Rifle Grouping Target, and
- BT110’s.

SAFETY PRECAUTIONS

Rifles will be proved when picked up, handed to or received from another person.

Rifles are never to be pointed at another person.

Horseplay is forbidden on or near the range.

Rifles, whether loaded or not, will always be pointed down range.

The RSO and the range staff have the authority to remove rifles from the firing line and conduct inspections, adjustments or repairs as required. Any rifles handled off the range must be unloaded and proved prior to handling.

Smoking is not permitted in the building.

Unofficial convenience copy of A-CR-CCP-802/PF-001, cached 2026-11-08 from https://app.cadets.gc.ca/cadet-publications/A-CR-CCP-802-PF-001/A-CR-CCP-802-PF-001.pdf.
Verify against the official publication.

Eating is not permitted on or near the range or around pellets.

All personnel shall either read or be briefed on the contents of the Unit Range Standing Orders.

All persons having come into contact with lead pellets shall wash their hand thoroughly when finished firing.

The RSO's directions and orders are to be obeyed at all times.

ARCS OF FIRE AND ELEVATION

Rifles shall not be elevated above 30 degrees to eliminate arcs of fire.

RANGE CLEARANCE

All rifles are to be unloaded and proved by the RSO. The RSO may delegate this task to firing point assistants, but the overall responsibility for clearing rifles remains with the RSO.

A verbal declaration is to be made by all personnel who fired or worked during the exercise to confirm that no personnel have any pellets in their possession. The phrase to use is "I have no pellets in my possession, Sir/Ma'am".

All remaining unfired pellets are to be returned to the RSO or range assistants responsible for ammunition accounting.

The range area will be cleaned and returned to its proper setting.

CHANGE TO REGULATIONS

Should there be a change in DND, CF, GGFG or CCM regulations concerning any aspect of these orders, changes shall be made in accordance with established procedures.

These orders may be reviewed and subject to change with the approval of the squadron Commanding Officer, in accordance with references stated above.

AUTHORITY

The Range Standing Orders for the "Indoor Air Rifle Range" located at local squadron of the squadron Commanding Officer.

_____ Date: _____

Commanding Officer
(Include full signature block)

Unofficial convenience copy of A-CR-CCP-802/PF-001, cached 2026-11-08 from https://app.cadets.gc.ca/cadet-publications/A-CR-CCP-802-PF-001/A-CR-CCP-802-PF-001.pdf.
Verify against the official publication.

ACTIVITY

STAR

Time: 60 min

OBJECTIVE

The objective of this activity is to generate and maintain interest in the Cadet Marksmanship Program.

RESOURCES

Photocopies of star diagram.

ACTIVITY LAYOUT

Air Rifle Range in accordance with Unit Range Standing Orders.

ACTIVITY GUIDELINES

1. Distribute one (1) photocopy of star diagram to each cadet.
2. Have each cadet write their name and rank on the star diagram.
3. Cadets will fire in relays following the range commands by the RSO.
4. Cadets will fire one pellet into each point of the star.
5. Give cadets five (5) minutes to fire the pellets.
6. On completion of activity or as time allows, place star diagrams out for all the cadets to review.
7. After viewing, all star diagrams they will be collected by the RSO to record results then return to the cadets.

SAFETY

In accordance with Unit Range Standing Orders.

Unofficial convenience copy of A-CR-CCP-802/PF-001, cached 2026-11-08 from https://app.cadets.gc.ca/cadet-publications/A-CR-CCP-802-PF-001/A-CR-CCP-802-PF-001.pdf.
Verify against the official publication.

STAR TARGET



D Cdts 3, 2006, Ottawa, ON: Department of National Defence

Unofficial convenience copy of A-CR-CCP-802/PF-001, cached 2026-11-08 from https://app.cadets.gc.ca/cadet-publications/A-CR-CCP-802-PF-001/A-CR-CCP-802-PF-001.pdf.
Verify against the official publication.

ACTIVITY

BEACH BALL

Time: 60 min

OBJECTIVE

The objective of the activity is to generate and maintain interest in the Cadet Marksmanship Program.

RESOURCES

Photocopies of beach ball diagram.

ACTIVITY LAYOUT

Air Rifle Range in accordance with Unit Range Standing Orders.

ACTIVITY GUIDELINES

1. Distribute one photocopy of beach ball diagram to each cadet.
2. Have each cadet write their name and rank on the beach ball diagram.
3. Cadets will fire in relays following the range commands by the RSO.
4. Cadets will be given ten pellets, to fire at the black circle.
5. Give cadets ten minutes to fire the pellets.
6. On completion of activity or as time allows, place beach ball diagram out for all the cadets to review.
7. After viewing, all beach ball diagrams, they will be collected by the RSO to record results. Return all beach ball diagrams to the cadets.

SAFETY

In accordance with Unit Range Standing Orders.

Unofficial convenience copy of A-CR-CCP-802/PF-001, cached 2026-11-08 from https://app.cadets.gc.ca/cadet-publications/A-CR-CCP-802-PF-001/A-CR-CCP-802-PF-001.pdf.
Verify against the official publication.

BEACH BALL TARGET



D Cdts 3, 2006, Ottawa, ON: Department of National Defence

Unofficial convenience copy of A-CR-CCP-802/PF-001, cached 2026-11-08 from https://app.cadets.gc.ca/cadet-publications/A-CR-CCP-802-PF-001/A-CR-CCP-802-PF-001.pdf.
Verify against the official publication.

ACTIVITY

NUMBER BLOCK

Time: 60 min

OBJECTIVE

The objective of this activity is to generate and maintain interest in the Cadet Marksmanship Program.

RESOURCES

Photocopies of number block diagram.

ACTIVITY LAYOUT

Air Rifle Range in accordance with Unit Range Standing Orders.

ACTIVITY GUIDELINES

1. Distribute one photocopy of number block diagram to each cadet.
2. Have each cadet write their name and rank on the number block diagram.
3. Cadets will fire in relays following the range commands by the RSO.
4. Cadets will be given six pellets to fire at the number(s) called by the RSO into the appropriate numerical Number Block.
5. Give cadets six minutes to fire pellets.
6. Cadets are only to fire once at each number and only when the RSO calls the number block.
7. On completion of activity or as time allows place number block diagrams out for all the cadets to review.
8. After viewing, all number block diagrams, they will be collected by the RSO to record results. Return all number block diagrams to the cadets.

SAFETY

In accordance with Unit Range Standing Orders.

Unofficial convenience copy of A-CR-CCP-802/PF-001, cached 2026-11-08 from https://app.cadets.gc.ca/cadet-publications/A-CR-CCP-802-PF-001/A-CR-CCP-802-PF-001.pdf.
Verify against the official publication.

NUMBER BLOCK TARGET

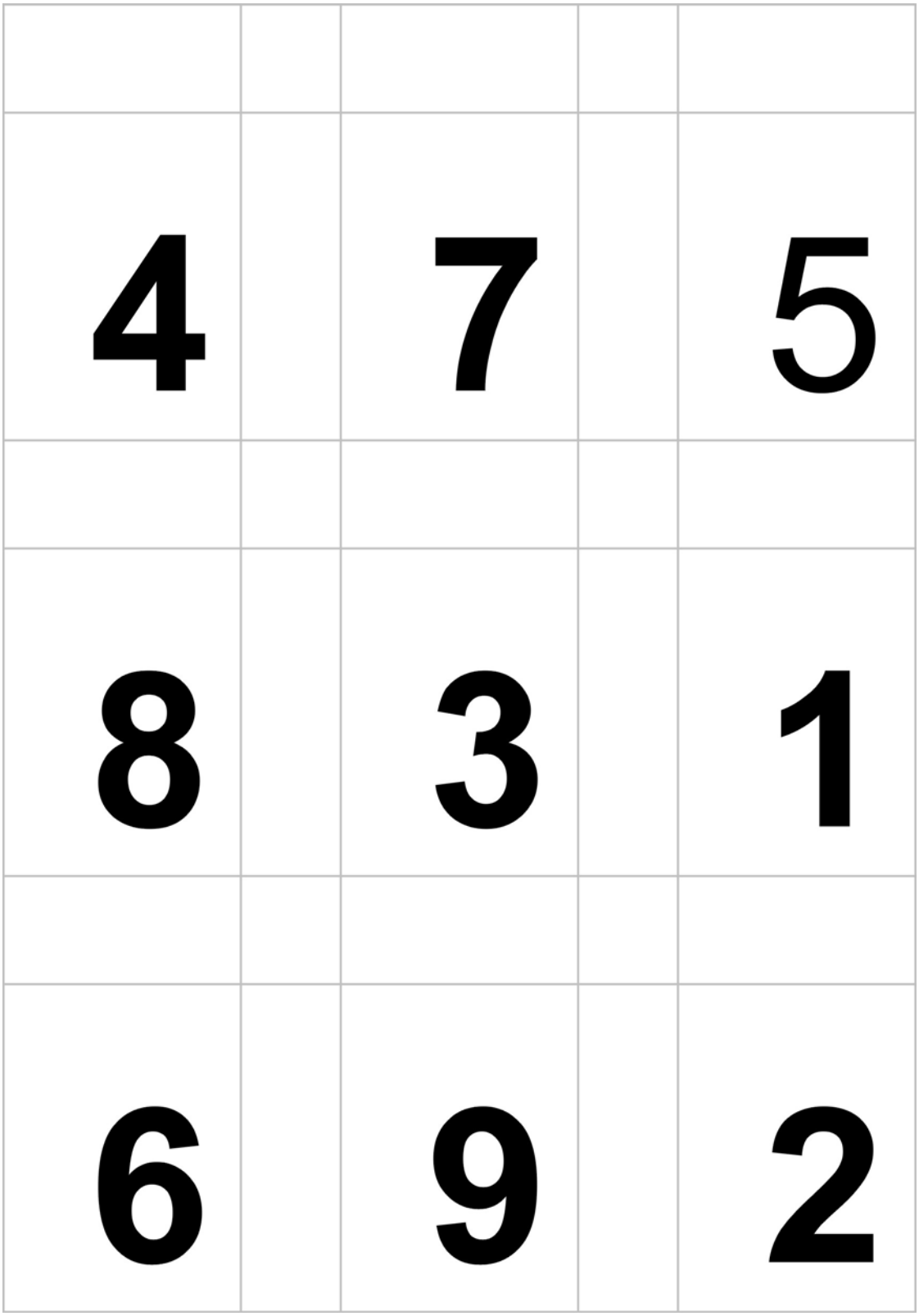

D Cdts 3, 2006, Ottawa, ON: Department of National Defence

Unofficial convenience copy of A-CR-CCP-802/PF-001, cached 2026-11-08 from https://app.cadets.gc.ca/cadet-publications/A-CR-CCP-802-PF-001/A-CR-CCP-802-PF-001.pdf.
Verify against the official publication.

ACTIVITY

CCT2001AR853

Time: 60 min

OBJECTIVE

The objective of this activity is to generate and maintain interest in the Cadet Marksmanship Program.

RESOURCES

Use the CCT2001AR853 target.

ACTIVITY LAYOUT

Air Rifle Range in accordance with Unit Range Standing Orders.

ACTIVITY GUIDELINES

1. Distribute one CCT2001AR853 target.

2. Have each cadet write their name and rank on the front CCT2001AR853 target.

3. When placing the target on the backstop the target will be placed so the diagrams can not be seen by the cadet. (This is a memory sighting drill.)

4. Cadets will fire in relays following the Range Commands by the RSO.

5. Cadets will be given twenty pellets to fire at their own time at the reverse target.

6. Only two pellets per diagram will be counted.

7. Give cadets fifteen minutes to fire pellets.

8. After viewing, all CCT2001AR853 targets, they will be collected by the RSO to record results. Return all CCT2001AR853 targets to the cadets.

SAFETY

In accordance with Unit Range Standing Orders.

Unofficial convenience copy of A-CR-CCP-802/PF-001, cached 2026-11-08 from https://app.cadets.gc.ca/cadet-publications/A-CR-CCP-802-PF-001/A-CR-CCP-802-PF-001.pdf.
Verify against the official publication.

THIS PAGE INTENTIONALLY LEFT BLANK

Unofficial convenience copy of A-CR-CCP-802/PF-001, cached 2026-11-08 from https://app.cadets.gc.ca/cadet-publications/A-CR-CCP-802-PF-001/A-CR-CCP-802-PF-001.pdf.
Verify against the official publication.

ACTIVITY

UNO CARDS

Time: 60 min

OBJECTIVE

The objective of this activity is to generate and maintain interest in the Cadet Marksmanship Program.

RESOURCES

Six decks of uno cards.

ACTIVITY LAYOUT

Air Rifle Range in accordance with Unit Range Standing Orders.

ACTIVITY GUIDELINES

1. Distribute ten uno cards to each cadet.
2. Have cadets write their name and rank on the back of the uno cards.
3. Cadets will fire in relays following the range commands by the RSO.
4. Cadets are given twenty pellets to fire at the uno cards.
5. Cadets may only fire at the colour and number of card called by the RSO once. If they do not have the card, they do not fire a pellet. (RSO to ensure you call all numbers/colours of cards distributed.
6. Give cadets five minutes to fire pellets.
7. On completion of activity or as time allows place all uno cards out for all the cadets to review.
8. After viewing, all uno cards, they will be collected by the RSO to record results. Return the uno cards to the cadets.

SAFETY

In accordance with Unit Range Standing Orders.

Unofficial convenience copy of A-CR-CCP-802/PF-001, cached 2026-11-08 from https://app.cadets.gc.ca/cadet-publications/A-CR-CCP-802-PF-001/A-CR-CCP-802-PF-001.pdf.
Verify against the official publication.

THIS PAGE INTENTIONALLY LEFT BLANK

Unofficial convenience copy of A-CR-CCP-802/PF-001, cached 2026-11-08 from https://app.cadets.gc.ca/cadet-publications/A-CR-CCP-802-PF-001/A-CR-CCP-802-PF-001.pdf.
Verify against the official publication.

ACTIVITY

PYRAMID (TRIANGLE)

Time: 60 min

OBJECTIVE

The objective of this activity is to generate and maintain interest in the Cadet Marksmanship Program.

RESOURCES

Photocopies of pyramid (triangle) target.

ACTIVITY LAYOUT

Air Rifle Range in accordance with Unit Range Standing Orders.

ACTIVITY GUIDELINES

1. Distribute one pyramid target to each cadet.
2. Have each cadet write their name and rank on the pyramid target.
3. Cadets will fire in relays following the range commands by the RSO.
4. Cadets will be given three pellets to fire one (1) pellet into each point of the pyramid.
5. Give cadets three (3) minutes to fire pellets.
6. On completion of activity or as time allows place all pyramid targets out for the cadets to review.
7. After viewing, all pyramid targets, will be collected by the RSO to record results. Return all pyramid diagrams to cadets.

SAFETY

In accordance with Unit Range Standing Orders.

Unofficial convenience copy of A-CR-CCP-802/PF-001, cached 2026-11-08 from https://app.cadets.gc.ca/cadet-publications/A-CR-CCP-802-PF-001/A-CR-CCP-802-PF-001.pdf.
Verify against the official publication.

PYRAMID TARGET



D Cdts 3, 2006, Ottawa, ON: Department of National Defence

Unofficial convenience copy of A-CR-CCP-802/PF-001, cached 2026-11-08 from https://app.cadets.gc.ca/cadet-publications/A-CR-CCP-802-PF-001/A-CR-CCP-802-PF-001.pdf.
Verify against the official publication.

ACTIVITY

BALLOON

Time: 60 min

OBJECTIVE

The objective of this activity is to increase and maintain interest in the Cadet Marksmanship Program.

RESOURCES

- Photocopies of balloon diagram targets, or
- Purchase twenty packages of various shaped balloons for target shapes. When using real balloons blow them up prior to recreational marksmanship activity.

ACTIVITY LAYOUT

Air Rifle Range in accordance with Unit Range Standing Orders.

ACTIVITY GUIDELINES

1. Distribute five balloons or one balloon paper targets to each cadet.

2. Have each cadet write their name and rank on blank paper (score sheets to record number of hits) or balloon paper targets.

3. Cadets will fire in relays following the range commands by the RSO.

4. Cadets will be given ten pellets to fire on their on time at the balloon targets.

5. Give cadets five (5) minutes to fire pellets.

6. On completion of activity or as time allows place score sheets or balloon targets out for review for all cadets.

7. After viewing, all score sheets or paper targets, will be collected by the RSO to record results. Return score sheets or paper targets to cadet.

SAFETY

In accordance with Unit Range Standing Orders.

Unofficial convenience copy of A-CR-CCP-802/PF-001, cached 2026-11-08 from https://app.cadets.gc.ca/cadet-publications/A-CR-CCP-802-PF-001/A-CR-CCP-802-PF-001.pdf.
Verify against the official publication.

BALLOON TARGET

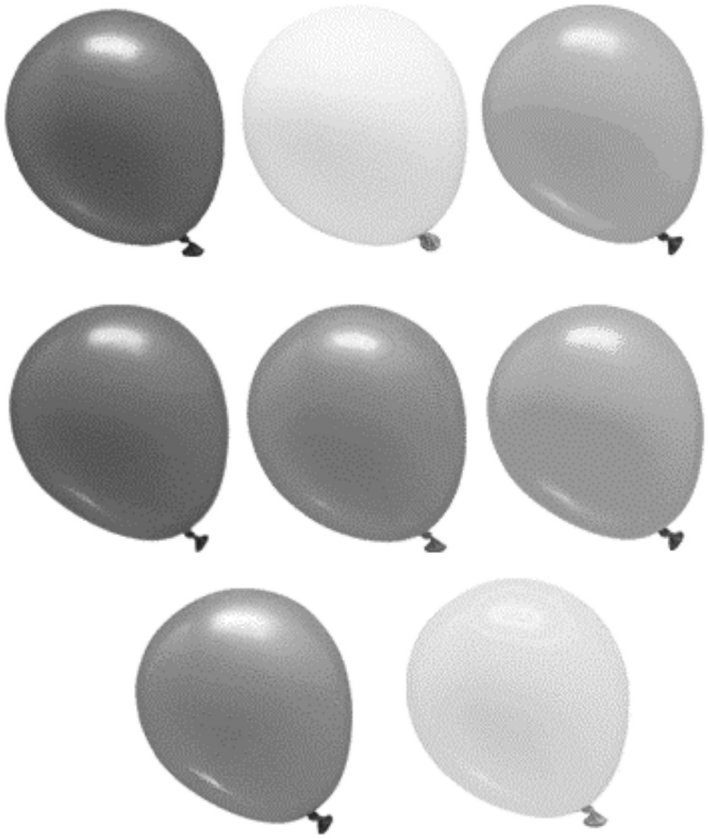

Unofficial convenience copy of A-CR-CCP-802/PF-001, cached 2026-11-08 from https://app.cadets.gc.ca/cadet-publications/A-CR-CCP-802-PF-001/A-CR-CCP-802-PF-001.pdf.
Verify against the official publication.

ACTIVITY

BT 100's

Time: 60 min

OBJECTIVE

The objective of this activity is to generate and maintain interest in the Cadet Marksmanship Program.

RESOURCES

Position the required number of BT 100's for each lane on the range.

ACTIVITY LAYOUT

Air Rifle Range in accordance with Unit Range Standing Orders.

ACTIVITY GUIDELINES

1. Designate firing lanes for each cadet.
2. Have cadets write their name and rank on the blank paper (score sheets) to record number of hits.
3. Cadets will fire in relays following the range commands by the RSO.
4. Cadets will be given an unlimited supply of pellets.
5. Give cadets ten (10) minutes to make all the plates fall on the BT 100.
6. On completion of activity or as time allows place all score sheets out for the cadets to review.
7. After viewing, all score sheets will be collected by the RSO to record results. Return score sheets to the cadets.

SAFETY

In accordance with Unit Range Standing Orders.

Unofficial convenience copy of A-CR-CCP-802/PF-001, cached 2026-11-08 from https://app.cadets.gc.ca/cadet-publications/A-CR-CCP-802-PF-001/A-CR-CCP-802-PF-001.pdf.
Verify against the official publication.

THIS PAGE INTENTIONALLY LEFT BLANK

Unofficial convenience copy of A-CR-CCP-802/PF-001, cached 2026-11-08 from https://app.cadets.gc.ca/cadet-publications/A-CR-CCP-802-PF-001/A-CR-CCP-802-PF-001.pdf.
Verify against the official publication.

ACTIVITY

BEAT THE CLOCK

Time: 60 min

OBJECTIVE

The objective of this activity is to increase and maintain interest in the Cadet Marksmanship Program.

RESOURCES

Photocopies beat the clock diagram.

ACTIVITY LAYOUT

Air Rifle Range in accordance with Unit Range Standing Orders.

ACTIVITY GUIDELINES

1. Distribute one photocopy of beat the clock diagram to each cadet.
2. Have each cadet write their name and rank on the beat the clock diagram.
3. Cadets will fire in relays following the range commands by the RSO.
4. Cadets will only fire at the hour number called by the RSO.
5. Cadets will be given six pellets, one pellet at each hour number designation called by the RSO. (Example if 1300 was called the cadets fires only at the 1 on the clock face.)
6. Give cadets six minutes to fire pellets.
7. On completion of activity or as time allows place all beat the clock diagrams out for cadets to review.
8. After viewing, all beat the clock diagram will be collected by the RSO to record results. Return all beat the clock diagrams to the cadets.

SAFETY

In accordance with Unit Range Standing Orders.

Unofficial convenience copy of A-CR-CCP-802/PF-001, cached 2026-11-08 from https://app.cadets.gc.ca/cadet-publications/A-CR-CCP-802-PF-001/A-CR-CCP-802-PF-001.pdf.
Verify against the official publication.

BEAT THE CLOCK TARGET



Unofficial convenience copy of A-CR-CCP-802/PF-001, cached 2026-11-08 from https://app.cadets.gc.ca/cadet-publications/A-CR-CCP-802-PF-001/A-CR-CCP-802-PF-001.pdf.
Verify against the official publication.

ACTIVITY

TIN CAN

Time: 60 min

OBJECTIVE

The objective of this activity is to increase and maintain interest in the Cadet Marksmanship Program.

RESOURCES

Photocopies of tin can diagram.

ACTIVITY LAYOUT

Air Rifle Range in accordance with Unit Range Standing Orders.

ACTIVITY GUIDELINES

1. Distribute one photocopy of tin can diagram to each cadet.
2. Have cadets write their name and rank on the tin can target.
3. Cadets will fire in relays following the range commands by the RSO.
4. Cadets will be given eight pellets to fire pellets into black circles on tin can.
5. Give cadet eight minutes to complete this diagram.
6. On completion of activity or as time allows place tin can targets out for all the cadets to review.
7. After viewing, all tin can targets will be collected by the RSO to record results. Return all tin can diagrams.

SAFETY

In accordance with Unit Range Standing Orders.

Unofficial convenience copy of A-CR-CCP-802/PF-001, cached 2026-11-08 from https://app.cadets.gc.ca/cadet-publications/A-CR-CCP-802-PF-001/A-CR-CCP-802-PF-001.pdf.
Verify against the official publication.

TIN CAN TARGET

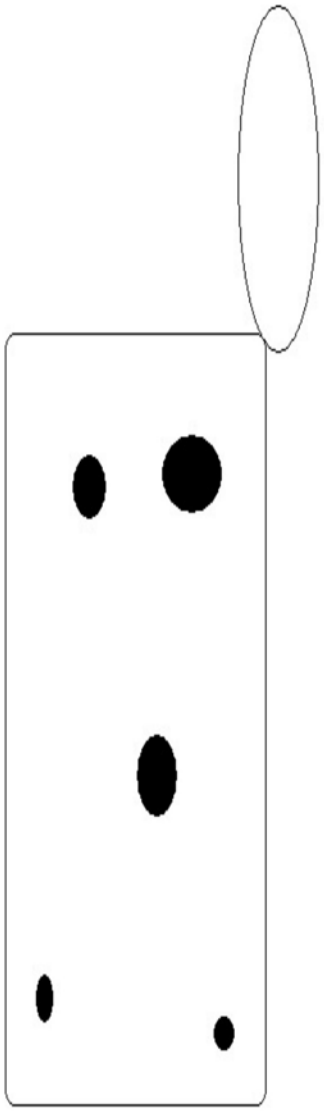

Cdts 3, 2006, Ottawa, ON: Department of National Defence

Unofficial convenience copy of A-CR-CCP-802/PF-001, cached 2026-11-08 from https://app.cadets.gc.ca/cadet-publications/A-CR-CCP-802-PF-001/A-CR-CCP-802-PF-001.pdf.
Verify against the official publication.