ROYAL CANADIAN AIR CADETS

PROFICIENCY LEVEL FOUR

INSTRUCTIONAL GUIDE

SECTION 9

EO C440.07 – OPERATE A TELESCOPE

Total Time: 60 min

PREPARATION

PRE-LESSON INSTRUCTIONS

Resources needed for the delivery of this lesson are listed in the lesson specification located in A-CR-CCP-804/PG-001, *Proficiency Level Four Qualification Standard and Plan*, Chapter 4. Specific uses for said resources are identified throughout the instructional guide within the TP for which they are required.

Review the lesson content and become familiar with the material prior to delivering the lesson.

Create slides of figures located at Attachments A and B.

Check that all equipment for TP 3 is serviceable prior to delivering the lesson.

Check the telescope's owner's manual for use procedures and modify the lesson as required.

PRE-LESSON ASSIGNMENT

Nil.

APPROACH

An interactive lecture was chosen for TPs 1 and 2 to orient the cadets to telescope theory and generate interest in the subject.

A demonstration and performance was chosen for TP 3 as it allows the instructor to explain and demonstrate the telescope-handling skills the cadets are expected to acquire while providing an opportunity for the cadets to practice the skill under supervision.

INTRODUCTION

REVIEW

Nil.

OBJECTIVES

By the end of this lesson the cadet shall be expected to operate manual and computerized telescopes.

IMPORTANCE

It is important for cadets to know how to operate telescopes because this provides a fascinating way to become personally involved with astronomy—an important aspect of aerospace development.

Unofficial convenience copy of A-CR-CCP-804/PF-001, cached 2026-11-08 from https://app.cadets.gc.ca/cadet-publications/A-CR-CCP-804-PF-001/A-CR-CCP-804-PF-001.pdf.
Verify against the official publication.

Teaching point 1 **Identify the parts of a telescope.**

Time: 10 min Method: Interactive Lecture



Show the cadets Attachment A and use a telescope as an example, to show where the parts of a telescope are located.

Many telescopes have the following parts and accessories:

Optical tube. Forms the body of the telescope.

Optical tube mounts. These include:

- equatorial mount (one axis of movement on the Earth's equatorial plane), and
- altazimuth mount (two axes of movement—altitude and azimuth).

Finderscope. Used to orient the main telescope.

Eyepiece. Used to focus the gathered star light for the human eye.

Lens cover. Used to protect the telescope optics when stored.

Mirrors. Used to reflect and concentrate light.

Lens(es). Used to refract (or change the path of) light.

Focus knob. Used to focus the light in the telescope.

Tripod. Used to provide a firm, steady base for the telescope.

Specialty computerized telescope parts. These include:

- control panel,
- on / off switch,
- computer interface port, and
- power cord.

CONFIRMATION OF TEACHING POINT 1

QUESTIONS:

Q1. How many axes of movement does an equatorial mount have?

Q2. What is the purpose of a finderscope?

Q3. What is the purpose of a lens?

Unofficial convenience copy of A-CR-CCP-804/PF-001, cached 2026-11-08 from https://app.cadets.gc.ca/cadet-publications/A-CR-CCP-804-PF-001/A-CR-CCP-804-PF-001.pdf.
Verify against the official publication.

ANTICIPATED ANSWERS:

A1. One axis of movement.

A2. A finderscope is used to orient the main telescope.

A3. A lens is used to refract (or change the path of) light.

Teaching point 2 **Describe telescope theory.**

Time: 10 min Method: Interactive Lecture

SAFETY

An observer must never look at the sun through an unfiltered lens because the focused sunlight will seriously damage a human eye.

Telescopes are fragile equipment requiring careful handling. Rough handling will not only damage the telescope, but may break the glass.

WHAT THE NUMBERS REPRESENT

Light Gathering of Main Lens or Mirror (Aperture)

The main lens or mirror of a telescope is referred to as the telescope's objective. The size of a telescope's objective determines the telescope's aperture. The larger the aperture of a telescope, the more light it can gather in a given unit of time. This not only makes certain features more visible to the human eye, it also shortens exposure times for celestial photography. A 30-cm (12-inch) main mirror produces images nine times brighter than a 10-cm (4-inch) mirror. Large telescopes are more difficult to move and handle, but smaller telescopes require longer exposure times for celestial photography.

Focal Length

Focal length is the distance that the main lens or mirror of a telescope takes to focus light to the point of focus. The longer the focal length, the larger the image at the focal point. This can be made up on a short focal length telescope, in most cases, by the magnification of the eyepiece. Although a long focal-length telescope produces a larger image at focus, it will also be fainter because the long focal path spreads out the light. During photography, when no eyepiece is used, a longer focal length is sometimes an advantage because it yields a larger image with comparable magnification.



The magnifying power of a telescope can be changed by changing the eyepiece (also referred to as the ocular). To determine the magnification of a telescope, divide the focal length of the telescope by the focal length of the eyepiece being used.

Focal Ratio

Focal ratio is the ratio of a telescope's focal length to the diameter of its main lens or mirror—its objective. Focal ratio is found by dividing focal length by objective diameter (aperture). A telescope with a mirror of 20 cm (8 inches) across and a focal length of 122 cm (48 inches) has a focal ratio of f/6. A telescope's focal length can be found by multiplying focal ratio by aperture, so that a telescope with a 20-cm (8-inch) aperture and f/6 ration would have a focal length of 122 cm (48 inches).

Long focal lengths are considered to be in the f/9 or greater range. A telescope of a given diameter coupled with a short focal length produces bright images but wide fields. This is fine for observing large deep-sky objects and

Unofficial convenience copy of A-CR-CCP-804/PF-001, cached 2026-11-08 from https://app.cadets.gc.ca/cadet-publications/A-CR-CCP-804-PF-001/A-CR-CCP-804-PF-001.pdf.
Verify against the official publication.

star fields, but to photograph planets and binary stars, a longer focal length is superior because the planet's or binary's image is larger at the point of focus.

SEEING

Seeing refers to the steadiness of the image of a celestial object viewed through the telescope. Good seeing means a steady image, while bad seeing means an unsteady image. Binoculars, which typically have much less magnification, can tolerate greater shaking movement without degraded seeing. It is the image, which is viewed, that determines seeing.

Image Shaking

Any movement of the telescope while viewing will degrade seeing. Heavier tripods tend to provide a steadier base for a telescope and improve seeing. Spindly tripods tend to degrade seeing by allowing the telescope to shake during use.

Shimmering (Atmospheric Turbulence)

Turbulence in the Earth's atmosphere imparts a shimmering quality to telescope images. This is the same effect which makes stars appear to twinkle to the naked eye. The intensity of the turbulence depends on winds, the temperature differential among upper-atmosphere layers and the local topography and air circulation immediately around the telescope. The larger the diameter of the telescope, the more it is affected, because large telescopes have to peer through more air than smaller ones do. A telescope with a main lens or mirror 20 cm (8 inches) in diameter must look through a column of air 20 cm (8 inches) wide and about 16 km (10 miles) long.

THREE MAIN TYPES OF TELESCOPE OPTICAL SYSTEMS

Refractor Telescope

Although the classic design of the refractor has undergone significant changes since Galileo's time, the principle is still the same.

A main lens composed of two or more different pieces of optically figured glass brings light to a focus at the opposite end of the tube. Refractors have the advantage of rendering sharp high-contrast images, large image scales (due to higher focal ratios) and excellent resolution.

Newtonian Reflector Telescope

Since its invention by Sir Isaac Newton in 1668, the reflector telescope has been very popular with amateur astronomers. It consists of a concave mirror positioned at the bottom of the tube that reflects and focuses starlight to a point just inside the tube's entrance. A flat secondary mirror redirects the light out the side of the tube and into an eyepiece lens.

Newtonian reflector telescopes provide accurate colour rendition of celestial objects and are less expensive for a given objective size than refractors. A 20-cm (8-inch) reflector costs about the same as a modest 10-cm (4-inch) refractor.

Schmidt-Cassegrain Telescope

Telescopes that employ the features of both refractors and reflectors are said to be catadioptric. One of the most popular catadioptric designs is the Schmidt-Cassegrain telescope (SCT).



Show the cadets Attachment B.

Unofficial convenience copy of A-CR-CCP-804/PF-001, cached 2026-11-08 from https://app.cadets.gc.ca/cadet-publications/A-CR-CCP-804-PF-001/A-CR-CCP-804-PF-001.pdf.
Verify against the official publication.

The SCT has a spherical primary mirror at one end of the tube and a correcting lens at the other. The secondary mirror is mounted directly onto the correcting lens (or plate). This, in turn, redirects the light back down the tube and through a hole in the centre of the main mirror, where the eyepiece is located.

Folding the light path allows a manufacturer to produce a telescope with a focal length that is twice the length of the tube. Thus, SCTs are lightweight, portable, and produce excellent images.

CONFIRMATION OF TEACHING POINT 2

QUESTIONS:

Q1. Why must one never look at the sun through an unfiltered lens?

Q2. What is seeing?

Q3. What are three advantages of SCTs?

ANTICIPATED ANSWERS:

A1. Focused sunlight will seriously damage a human eye.

A2. Seeing refers to the steadiness of the image of a celestial object viewed through the telescope.

A3. SCTs are lightweight, portable, and produce excellent images.

Teaching point 3 **Explain, demonstrate and have the cadets set up, operate and dismantle a telescope.**

Time: 30 min Method: Demonstration and Performance



For this skill TP, it is recommended that instruction take the following format:

(1) Explain and demonstrate the complete skill while cadets observe.

(2) Explain and demonstrate each step required to complete the skill. Monitor cadets as they imitate each step.

(3) Monitor the cadets' performance as they practice the complete skill.

Note: Assistant instructors may be employed to monitor the cadet's performance.

1. To set up a telescope:
   a. remove all parts from their containers, ensuring that the optical tube is placed on a sturdy level surface;
   b. set up the tripod;
   c. attach the telescope to the tripod;
   d. attach the finderscope (if required);
   e. attach the eyepiece (if required);
   f. align the finderscope; and
   g. align the telescope.

Unofficial convenience copy of A-CR-CCP-804/PF-001, cached 2026-11-08 from https://app.cadets.gc.ca/cadet-publications/A-CR-CCP-804-PF-001/A-CR-CCP-804-PF-001.pdf.
Verify against the official publication.

2. To operate and dismantle a telescope:
    a. adjust the right ascension;
    b. adjust the declination;
    c. remove the eyepiece (if required);
    d. remove the finderscope (if required);
    e. remove the telescope from its tripod;
    f. collapse the tripod; and
    g. return all parts to their containers.

Cadets must be careful when handling fragile equipment.

CONFIRMATION OF TEACHING POINT 3

The cadets' participation in setting up, operating and dismantling telescopes will serve as the confirmation of this TP.

END OF LESSON CONFIRMATION

QUESTIONS:

Q1. How many axes of movement does an altazimuth mount have?

Q2. Who invented the Newtonian reflector telescope design and in what year was it invented?

Q3. What does folding the light path in a SCT allow the manufacturer to do?

ANTICIPATED ANSWERS:

A1. Altazimuth mounts have two axes of movement.

A2. Sir Isaac Newton in 1668.

A3. Folding the light path allows a manufacturer to produce a telescope with a focal length that is twice the length of the tube.

CONCLUSION

HOMEWORK / READING / PRACTICE

Nil.

METHOD OF EVALUATION

Nil.

CLOSING STATEMENT

Knowing how to operate telescopes provides a fascinating way to become personally involved with an important aspect of aerospace development.

Unofficial convenience copy of A-CR-CCP-804/PF-001, cached 2026-11-08 from https://app.cadets.gc.ca/cadet-publications/A-CR-CCP-804-PF-001/A-CR-CCP-804-PF-001.pdf.
Verify against the official publication.

INSTRUCTOR NOTES / REMARKS

Cadets who are qualified Advanced Aerospace may assist with this instruction.

REFERENCES

C3-179 ISBN 1-55209-302-6 Dickenson, T. (2001). *Night watch: A practical guide to viewing the universe*. Willowdale, ON: Firefly Books.

C3-286 11073-INST. Celestron. (2006). *CPC series instructional manual*. Torrance, CA: Celestron.

Unofficial convenience copy of A-CR-CCP-804/PF-001, cached 2026-11-08 from https://app.cadets.gc.ca/cadet-publications/A-CR-CCP-804-PF-001/A-CR-CCP-804-PF-001.pdf.
Verify against the official publication.

THIS PAGE INTENTIONALLY LEFT BLANK

Unofficial convenience copy of A-CR-CCP-804/PF-001, cached 2026-11-08 from https://app.cadets.gc.ca/cadet-publications/A-CR-CCP-804-PF-001/A-CR-CCP-804-PF-001.pdf.
Verify against the official publication.



1	Control Panel (see below)	8	Optical Tube
2	Focus Knob	9	Schmidt Corrector Lens
3	Star Diagonal	10	Fork Arm
4	Hand Control	11	Carrying Handle
5	Eyepiece	12	Right Ascension Locking Knob
6	Finderscope	13	Tripod
7	Finderscope Quick Release Bracket	14	Accessory Tray / Center Support Bracket
A	Hand Control Port	D	Auto Guider Port
B	Auxiliary Port s	E	On/Off Switch
C	PC Interface Port	F	12v Input Jack

Note. From Celestron®, 2006, CPC™ Series Instructional Manual. Copyright 2006 by Celestron, Torrance, CA: Celestron.

Figure A-1 Celestron Telescope

Unofficial convenience copy of A-CR-CCP-804/PF-001, cached 2026-11-08 from https://app.cadets.gc.ca/cadet-publications/A-CR-CCP-804-PF-001/A-CR-CCP-804-PF-001.pdf.
Verify against the official publication.

THIS PAGE INTENTIONALLY LEFT BLANK

Unofficial convenience copy of A-CR-CCP-804/PF-001, cached 2026-11-08 from https://app.cadets.gc.ca/cadet-publications/A-CR-CCP-804-PF-001/A-CR-CCP-804-PF-001.pdf.
Verify against the official publication.

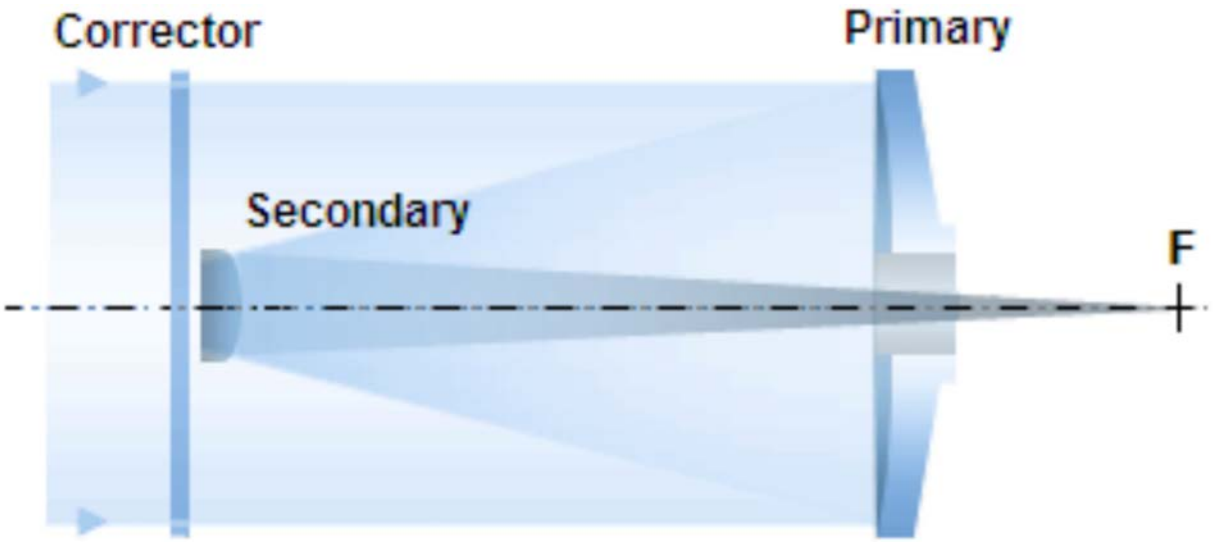

Note. From "telescopeOptics.net", by Vladimir Sacek, 2006, Schmidt-Cassegrain Telescope (SCT) Retrieved October 15, 2008, from http://www.telescope-optics.net/SCT.htm.

Figure B-1 Schmidt-Cassegrain Telescope Design

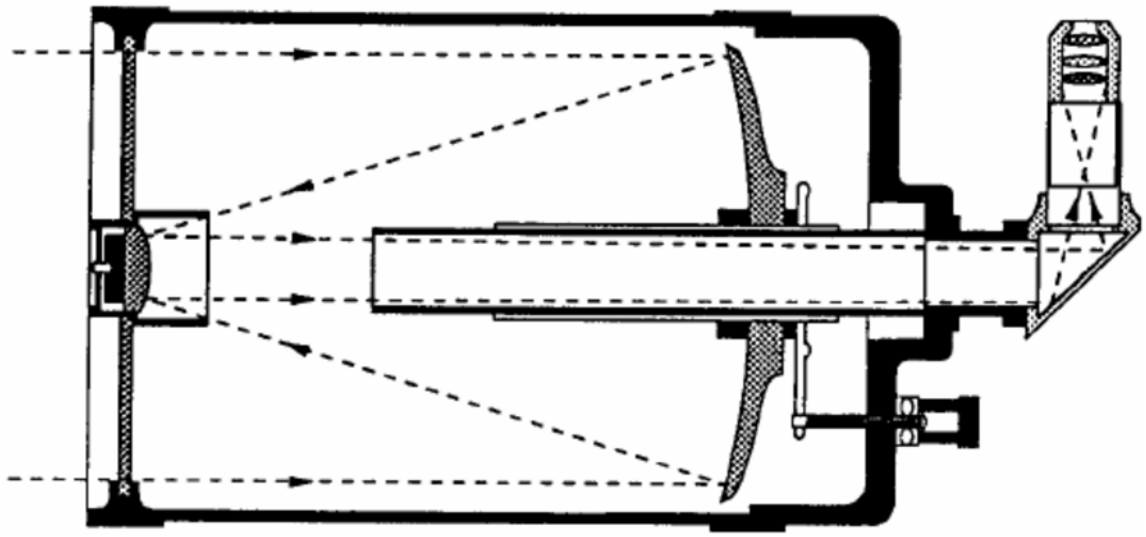

Note. From Celestron®, 2006, CPC™ Series Instructional Manual. Copyright 2006 by Celestron, Torrance, CA: Celestron.

Figure B-2 Celestron SCT

Unofficial convenience copy of A-CR-CCP-804/PF-001, cached 2026-11-08 from https://app.cadets.gc.ca/cadet-publications/A-CR-CCP-804-PF-001/A-CR-CCP-804-PF-001.pdf.
Verify against the official publication.

THIS PAGE INTENTIONALLY LEFT BLANK

Unofficial convenience copy of A-CR-CCP-804/PF-001, cached 2026-11-08 from https://app.cadets.gc.ca/cadet-publications/A-CR-CCP-804-PF-001/A-CR-CCP-804-PF-001.pdf.
Verify against the official publication.