**ROYAL CANADIAN AIR CADETS**

**PROFICIENCY LEVEL FOUR**

**INSTRUCTIONAL GUIDE**

**SECTION 7**

**EO C440.05 – DESCRIBE ROBOTICS**

Total Time: 30 min

## PREPARATION

### PRE-LESSON INSTRUCTIONS

Resources needed for the delivery of this lesson are listed in the lesson specification located in A-CR-CCP-804/PG-001, *Proficiency Level Four Qualification Standard and Plan*, Chapter 4. Specific uses for said resources are identified throughout the instructional guide within the TP for which they are required.

Review the lesson content and become familiar with the material prior to delivering the lesson.

Create slides of the figures located at Attachments A–C.

### PRE-LESSON ASSIGNMENT

Nil.

### APPROACH

An interactive lecture was chosen for this lesson to give the cadets an overview of robotics and generate interest in the subject.

## INTRODUCTION

### REVIEW

Nil.

### OBJECTIVES

By the end of this lesson the cadet shall have described robotics and shall be expected to identify types of robots.

### IMPORTANCE

It is important for cadets to be familiar with robot types and various robotic applications because they form an important and growing aspect of the aerospace industry in both manufacturing and operations.



Unofficial convenience copy of A-CR-CCP-804/PF-001, cached 2026-11-08 from https://app.cadets.gc.ca/cadet-publications/A-CR-CCP-804-PF-001/A-CR-CCP-804-PF-001.pdf.
Verify against the official publication.

**Teaching point 1** **Describe types of robots.**

Time: 10 min Method: Interactive Lecture

A robot is defined as a machine that looks and functions like a human being. A robot is also defined as a machine that is capable of carrying out a complex series of tasks automatically. Some organizations provide special definitions of a robot, such as those found at NASA's ROVer Ranch website, which include:

- a machine that looks like a human being and performs various complex acts similar to those of a human being (such as walking or talking);
- a device that automatically performs complicated, often repetitive, tasks; and
- any mechanism guided by automatic controls.

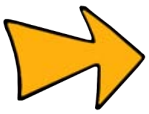

NASA's ROVer Ranch is a place to learn about robotic engineering at http://prime.jsc.nasa.gov/ROV/

**AUTONOMOUS SYSTEMS**

Autonomous systems are the physical embodiment of machine intelligence. This means that an autonomous system combines artificial intelligence (AI) with the manipulating abilities of remote-controlled systems.

**REMOTE-CONTROLLED SYSTEMS**

The earliest robots, such as the armoured robot knight created by Leonardo da Vinci in 1495, did not think for themselves. Representing the technology of 1495, Leonardo da Vinci's robot consisted of two independent systems:

- three-degree-of-freedom legs, ankles, knees, and hips; and
- four-degree-of-freedom arms with articulated shoulders, elbows, wrists, and hands.



Examples of Degrees of Freedom (DOF) are:

- tilting forward and backward (pitching);
- turning left and right (yawing);
- tilting side to side (rolling);
- moving up and down (heaving);
- moving left and right (swaying); and
- moving forward and backward (surging).




Show the cadets the slide of Figures A-1 and A-2 located at Attachment A.



Unofficial convenience copy of A-CR-CCP-804/PF-001, cached 2026-11-08 from https://app.cadets.gc.ca/cadet-publications/A-CR-CCP-804-PF-001/A-CR-CCP-804-PF-001.pdf.
Verify against the official publication.

The orientation of the arms on Leonardo's robot indicates that it was designed for whole-arm grasping, which means that all the joints moved in unison. A mechanical, analog-programmable controller within the chest provided power and control for the arms.

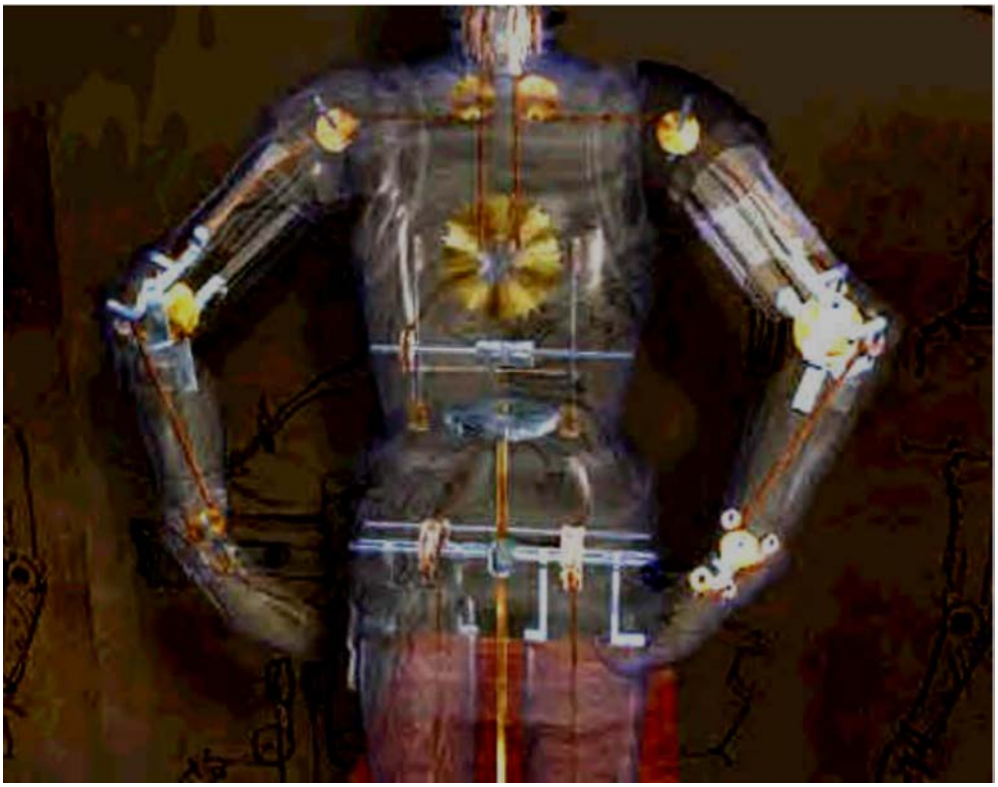

*Note. From "Z-Kat the Digital Surgery Company", by R. Abovitz, 2001, Leonardo's Robot, Copyright 2008 by R. Abovitz. Retrieved November 18, 2008, from http://www.z-kat.com/company/adv_research/leonardo.shtml*

Figure 1 Leonardo's Mechanical Analog-Programmable Controller

The legs were powered by an external crank arrangement driving the cable, which was connected to key locations in the ankle, knee, and hip. This armoured robot knight was designed to sit up, wave its arms, and move its head via a flexible neck while opening and closing its anatomically correct jaw. It may have made sounds to the accompaniment of automated drums. On the outside, the robot is dressed in a typical German-Italian suit of armour of the late fifteenth century.



Modern robots such as the Canadarm and the Canadarm2 combine the two modes of remote control and autonomy.

**Canadarm: Shuttle Remote Manipulator System (SRMS)**

The space shuttle's general-purpose computer (GPC) controls the movement of the SRMS. The astronauts use a hand controller, which tells the computer what the astronaut would like the arm to do. Built-in software then studies the astronaut's commands and calculates which joints should move, what direction to move them in, how fast to move them and at what angle to move.



Unofficial convenience copy of A-CR-CCP-804/PF-001, cached 2026-11-08 from https://app.cadets.gc.ca/cadet-publications/A-CR-CCP-804-PF-001/A-CR-CCP-804-PF-001.pdf.
Verify against the official publication.




Show the cadets the slide of Figure A-3 located at Attachment A.

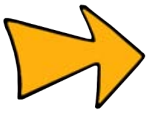

Figure A-3 is a scale drawing of the Canadarm.

While the computer is issuing commands to each of the joints, it monitors each joint every 80 milliseconds. Any movements of the astronaut's hand are re-examined and recalculated by the GPC and updated commands are then sent out to each of the joints.

Should a failure occur, the GPC automatically applies the brakes to all joints and notifies the astronaut of a failure condition. The control system also provides a continuous display of joint rates and speeds, which are displayed on monitors located on the flight deck of the shuttle. As with any control system, the GPC can be overridden and the astronaut can operate the joints individually from the flight deck.

---

**CONFIRMATION OF TEACHING POINT 1**

---

**QUESTIONS**:

Q1. What are autonomous systems?

Q2. What two modes do robots such as the Canadarm and the Canadarm2 combine?

Q3. What computer controls the SRMS?

**ANTICIPATED ANSWERS**:

A1. Autonomous systems are the physical embodiment of machine intelligence.

A2. The two modes combined in the Canadarm and the Canadarm2 are remote control and autonomy.

A3. The space shuttle's general-purpose computer (GPC) controls the movement of the SRMS.

---

**Teaching point 2** **Describe robotic applications.**

Time: 15 min Method: Interactive Lecture

---

Robots are especially desirable for certain work functions because, unlike humans, they:

- never get tired;
- can endure physical conditions that are uncomfortable, dangerous or even airless;
- do not get bored by repetition; and
- cannot be distracted from the task at hand.

Early industrial robots that handled radioactive material in atomic labs were called master / slave manipulators. They were connected with mechanical linkages and steel cables. Remote arm manipulators can now be moved by push buttons, switches or joysticks.



Unofficial convenience copy of A-CR-CCP-804/PF-001, cached 2026-11-08 from https://app.cadets.gc.ca/cadet-publications/A-CR-CCP-804-PF-001/A-CR-CCP-804-PF-001.pdf.
Verify against the official publication.

Robots sometimes have advanced sensory systems that process information and appear to function as if they have brains. Their "brain" is actually a form of computerized AI, which allows a robot to perceive conditions and decide on a course of action based on these conditions.

A robot may include any of the following components:

- **Effectors.** "Arms", "legs", "hands", "feet".
- **Sensors.** Parts that act like senses, can detect objects or things like heat and light and convert the information into symbols that computers understand.
- **Computer.** The brain that contains instructions called algorithms to control the robot.
- **Equipment.** Includes tools and mechanical fixtures.

Characteristics that make autonomous robots different from regular machinery are that they usually function by themselves, are sensitive to their environment, adapt to variations in the environment or to errors in prior performance, are task-oriented and often have the ability to try different methods to accomplish a task.

**INDUSTRIAL FABRICATION**

Typical industrial robots do jobs that are difficult, dangerous or dull. They lift heavy objects, paint, handle chemicals, and perform assembly work. They perform the same job hour after hour, day after day with precision. They do not get tired and they do not make errors associated with fatigue and are ideally suited to performing repetitive tasks.

The major categories of industrial robots, differentiated by mechanical structure are:

- **Cartesian / Gantry robot.** Used for pick and place work, application of sealant, assembly operations, handling machine tools and arc welding. It is a robot whose arm has three joints and whose axes are coincident with Cartesian coordinates on X, Y and Z axes.




Show the cadets the slide of Figures B-1 and B-2 located at Attachment B.

- **Cylindrical robot.** Used for assembly operations, handling machine tools, spot welding, and handling die-casting machines. It is a robot whose axes form a cylindrical coordinate system.




Show the cadets the slide of Figure B-3 located at Attachment B.

- **Polar (Spherical) robot.** Used for handling machine tools, spot welding, die-casting, fettling machines, gas welding and arc welding. It is a robot whose axes form polar coordinates.




Show the cadets the slide of Figure B-4 located at Attachment B.



Unofficial convenience copy of A-CR-CCP-804/PF-001, cached 2026-11-08 from https://app.cadets.gc.ca/cadet-publications/A-CR-CCP-804-PF-001/A-CR-CCP-804-PF-001.pdf.
Verify against the official publication.

- **SCARA robot.** Used for pick and place work, application of sealant, assembly operations and handling machine tools. It is a robot that has two parallel rotary joints to provide compliance in a plane.



Show the cadets the slide of Figure B-5 located at Attachment B.

- **Articulated robot.** Used for assembly operations, die-casting, fettling machines, gas welding, arc welding and spray painting. It is a robot whose arm has at least three rotary joints.



Show the cadets the slide of Figure B-6 located at Attachment B.

- **Parallel robot.** One use is a mobile platform handling cockpit flight simulators. It is a robot whose arms have concurrent prismatic or rotary joints.



Show the cadets the slide of Figures B-7 and B-8 located at Attachment B.

**MACHINING**

Computer Numerical Control (CNC) refers to a computer controller that reads computer code instructions and drives a machine tool—a powered mechanical device typically used to fabricate components by the selective removal of material from a larger block of material. The operating parameters of the CNC are altered by changing the software, making CNC machines a type of robot.

**CUTTING**

The most common methods of cutting used by robots are plasma cutting and oxyfuel cutting.

Plasma cutting is a process that uses a high velocity jet of ionized gas delivered from a constricting orifice. Plasma cutting takes place when a high-velocity stream of gas (plasma) is forced through a narrow torch. Plasma cutting can be performed on any type of conductive metal—mild steel, aluminum and stainless steel are some examples.

Oxyfuel cutting is a process that cuts by burning, or oxidizing, the metal it is severing. It is therefore limited to steel and other ferrous metals that support the oxidizing process.

**ASSEMBLING**

Assembly robots have expanded production capabilities in the manufacturing world, making the assembly process faster, more efficient and more precise than ever before. Robots have saved workers from tedious and dull assembly line jobs, and increased production and savings in the process. One class of assembly robot is the Selective Compliant Articulated Robot for Assembly (SCARA) Robot.



Unofficial convenience copy of A-CR-CCP-804/PF-001, cached 2026-11-08 from https://app.cadets.gc.ca/cadet-publications/A-CR-CCP-804-PF-001/A-CR-CCP-804-PF-001.pdf.
Verify against the official publication.




Show the cadets the slide of Figure B-5 located at Attachment B.

The work characteristics of robots give them several advantages for industrial assembly, including:

- **No fatigue.** An assembly robot can work every day, every hour without pause.
- **More output.** The consistent output of a robotic system along with quality, and repeatability are unmatched even with the most challenging of applications.
- **Better performance.** Automated systems provide precise, exact performance. Many of them are equipped with vision technology to aid in production.
- **Savings.** Robot assembly systems create savings by eliminating downtime and labour costs, while increasing production and performance.

**WELDING**

There are two popular types of industrial welding robots; Articulating and Cartesian.

- **Articulating robots.** Employ arms and rotating joints. These robots move like a human arm with a rotating wrist at the end. This creates an irregularly shaped robotic working zone.
- **Cartesian robots.** Move in line in any of three axes (X, Y, Z). In addition to linear movement of the robot along axes there is a wrist attached to the robot to allow rotational movement. This creates a robotic working zone that is box shaped.

**EXPLORING**

**Underwater Exploration**




Show the cadets the slide of Figure C-1 located at Attachment C.

A seaglider is an Autonomous Underwater Vehicle (AUV) that measures temperature, salinity, depth-averaged current and other quantities in the ocean. A seaglider uses satellite data telemetry to receive commands and send the measurements it collects in near-real time. A seaglider AUV collects ocean physical properties across a range of depths and areas for oceanographers and military planners.

**Deep Space 1 (DS1)**

Launched in October 1998, Deep Space 1 (DS1) was the first mission of NASA's new millennium program, chartered to validate new technologies important for future space and earth science programs. The advanced technology payload that was tested on DS1 included a solar-powered Ion Propulsion System (IPS), solar concentrator arrays, an autonomous on-board optical navigation system and an autonomous artificial intelligence (AI) system known as Remote Agent.




Show the cadets the slide of Figure C-2 located at Attachment C.



Unofficial convenience copy of A-CR-CCP-804/PF-001, cached 2026-11-08 from https://app.cadets.gc.ca/cadet-publications/A-CR-CCP-804-PF-001/A-CR-CCP-804-PF-001.pdf.
Verify against the official publication.



Figure C-2 shows DS1 trajectory: The dotted portion of the trajectory shows where the DS1 was coasting (ballistic flight) and the solid portion indicates where the IPS thrust was turned on, accelerating the spacecraft.

The autonomous optical navigation system on board DS1 used images of asteroids and stars collected by the onboard camera system, while the onboard navigator system computed and corrected the spacecraft's course.

The autonomous operations system was composed of an AI "agent" that planned, made decisions, and operated by itself.

**SPACE**

Space-based robotic technology falls within the following three broad mission areas:

- exploration robotics,
- science payload maintenance, and
- on-orbit servicing.

Important robotic devices proven in space include:

- Remotely Operated Vehicle (ROV) such as the Mars Exploration Rovers, and
- Remote Manipulator System (RMS) such as the Canadarm.

An ROV can be an unmanned spacecraft that remains in flight, a lander that lands on a body such as a moon, asteroid or planet and operates from a stationary position, or a rover that can move over terrain once it has landed. One of the best known ROV's is the Sojourner rover that was deployed by the Mars Pathfinder spacecraft.




Show the cadets the slide of Figure C-3 located at Attachment C.

**EMERGENCY SERVICES**

Robots can resolve high-risk scenarios safely, including bomb disposal, hostage situations, search and rescue and other dangerous incidents. Robots can detect explosive vapors and particulates emanating from munitions and Improvised Explosive Devices (IEDs) while keeping the operator and civilians out of harm’s way. They can drive to and reach through windows, under vehicles and around obstructing objects and place ultra-sensitive explosive detectors close to suspicious packages and other potentially dangerous items.

**MILITARY**

Robots can carry heavy payloads, travel over rough terrain and climb stairs while maintaining full mobility. When equipped with appropriate equipment, they can support a variety of critical missions, including:

- battlefield casualty extraction,
- Explosive Ordnance Disposal (EOD),
- vehicle-borne Improvised Explosive Device (IED) detection,
- physical security,



Unofficial convenience copy of A-CR-CCP-804/PF-001, cached 2026-11-08 from https://app.cadets.gc.ca/cadet-publications/A-CR-CCP-804-PF-001/A-CR-CCP-804-PF-001.pdf.
Verify against the official publication.

- firefighting,
- Special Weapons And Tactics (SWAT),
- reconnaissance,
- hazardous material handling,
- chemical-biological weapon detection,
- building clearance,
- target acquisition, and
- weaponized missions.

**Sniper Detection**




Show the cadets the slide of Figure C-4 located at Attachment C.

By providing superior situational awareness, a robot can support safer ground troop movement. It can find the point of hostile gunfire without exposing ground troops, allowing them to move more safely.

**CONFIRMATION OF TEACHING POINT 2**

**QUESTIONS**:

Q1. What are two properties of robots that make them especially desirable for certain jobs?

Q2. What was the name of the AI on DS1?

Q3. Name three possible military missions for robots.

**ANTICIPATED ANSWERS**:

A1. Properties of robots that make them especially desirable for certain jobs include:

- robots never get tired;
- robots can endure physical conditions that are uncomfortable or even dangerous;
- robots operate in airless conditions;
- robots do not get bored by repetition; and
- robots cannot be distracted from the task at hand.

A2. Remote agent.

A3. Possible military missions for robots include:

- battlefield casualty extraction,
- EOD,
- vehicle-borne IED detection,
- physical security,



Unofficial convenience copy of A-CR-CCP-804/PF-001, cached 2026-11-08 from https://app.cadets.gc.ca/cadet-publications/A-CR-CCP-804-PF-001/A-CR-CCP-804-PF-001.pdf.
Verify against the official publication.

- firefighting,
- SWAT,
- reconnaissance,
- hazardous material handling,
- chemical-biological weapon detection,
- building clearance,
- target acquisition, and
- weaponized missions.

---

**END OF LESSON CONFIRMATION**

---

**QUESTIONS**:

Q1. What two modes do robots such as the Canadarm and the Canadarm2 combine?

Q2. What characteristics make autonomous robots different from regular machinery?

Q3. What are five applications of robots?

**ANTICIPATED ANSWERS**:

A1. Remote control and autonomy.

A2. Characteristics that make autonomous robots different from regular machinery are that they:

- usually function by themselves;
- are sensitive to their environment;
- adapt to variations in the environment or to errors in prior performance;
- are task oriented; and
- have the ability to try different methods to accomplish a task.

A3. Industrial fabrication, exploration, space, emergency services, and military.

---

**CONCLUSION**

---

**HOMEWORK / READING / PRACTICE**

Nil.

**METHOD OF EVALUATION**

Nil.

**CLOSING STATEMENT**

Robots and various robotic applications are encountered every day in every walk of life. They form an important and growing aspect of the aerospace industry in both manufacturing and operations.

**INSTRUCTOR NOTES / REMARKS**

Cadets who are qualified Advanced Aerospace may assist with this instruction.



Unofficial convenience copy of A-CR-CCP-804/PF-001, cached 2026-11-08 from https://app.cadets.gc.ca/cadet-publications/A-CR-CCP-804-PF-001/A-CR-CCP-804-PF-001.pdf.
Verify against the official publication.

## REFERENCES

C3-292 NASA. (2003). *Rover ranch: K-12 experiments in robotic software*. Retrieved November 20, 2008, from http://prime.jsc.nasa.gov/ROV/



Unofficial convenience copy of A-CR-CCP-804/PF-001, cached 2026-11-08 from https://app.cadets.gc.ca/cadet-publications/A-CR-CCP-804-PF-001/A-CR-CCP-804-PF-001.pdf.
Verify against the official publication.

THIS PAGE INTENTIONALLY LEFT BLANK



Unofficial convenience copy of A-CR-CCP-804/PF-001, cached 2026-11-08 from https://app.cadets.gc.ca/cadet-publications/A-CR-CCP-804-PF-001/A-CR-CCP-804-PF-001.pdf.
Verify against the official publication.

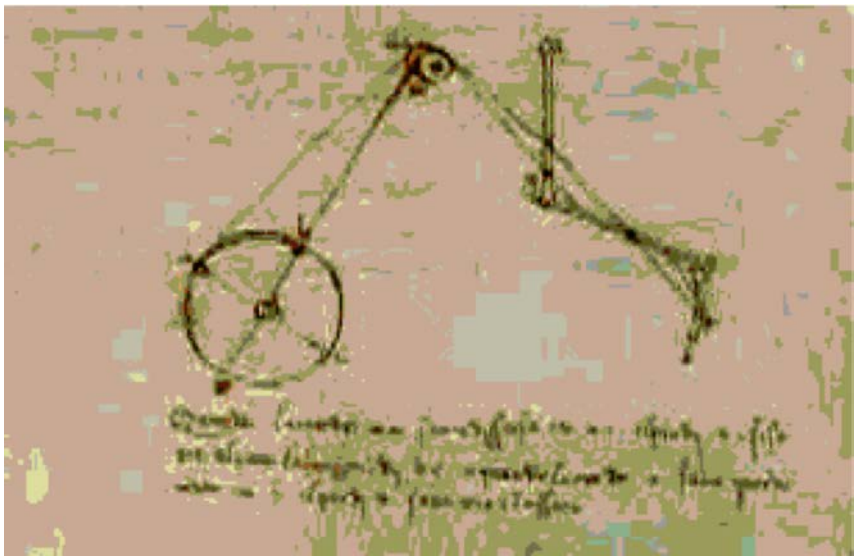

*Note. From "Z-Kat the Digital Surgery Company", by R. Abovitz, 2001, Leonardo's Robot, Copyright 2008 by R. Abovitz. Retrieved November 18, 2008, from http://www.z-kat.com/company/adv_research/leonardo.shtml*

Figure A-1  Leonardo da Vinci's Robot Drawing



*Note. From "Z-Kat the Digital Surgery Company", by R. Abovitz, 2001, Leonardo's Robot, Copyright 2008 by R. Abovitz. Retrieved November 18, 2008, from http://www.z-kat.com/company/adv_research/leonardo.shtml*

Figure A-2  Leonardo da Vinci's Robot



Unofficial convenience copy of A-CR-CCP-804/PF-001, cached 2026-11-08 from https://app.cadets.gc.ca/cadet-publications/A-CR-CCP-804-PF-001/A-CR-CCP-804-PF-001.pdf.
Verify against the official publication.

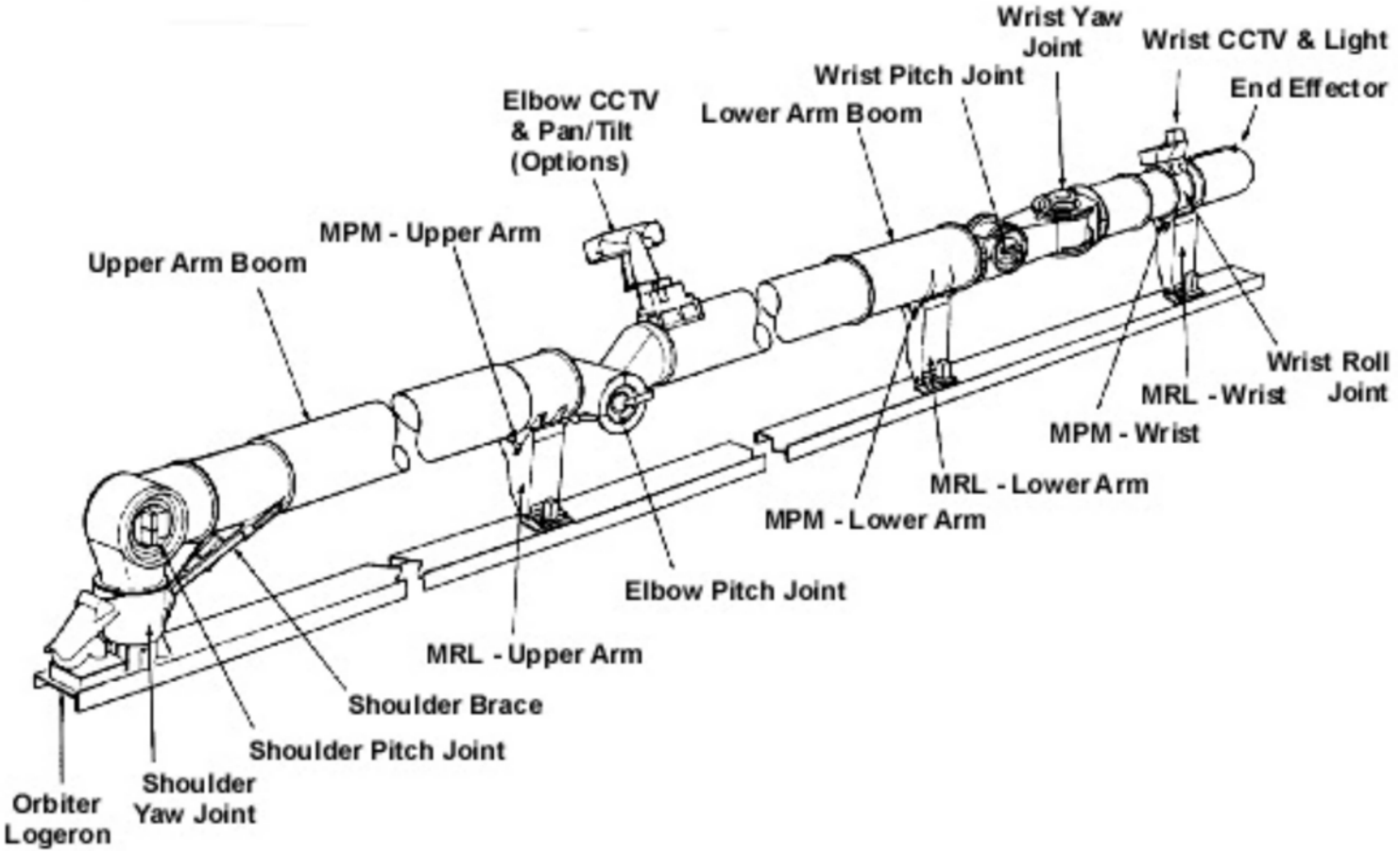


*Note. From Canadian Space Agency, 2006, The Structure of Canadarm. Retrieved November 18, 2008, from http://www.asc-csa.gc.ca/eng/canadarm/description.asp*

Figure A-3 Canadarm



Unofficial convenience copy of A-CR-CCP-804/PF-001, cached 2026-11-08 from https://app.cadets.gc.ca/cadet-publications/A-CR-CCP-804-PF-001/A-CR-CCP-804-PF-001.pdf. Verify against the official publication.

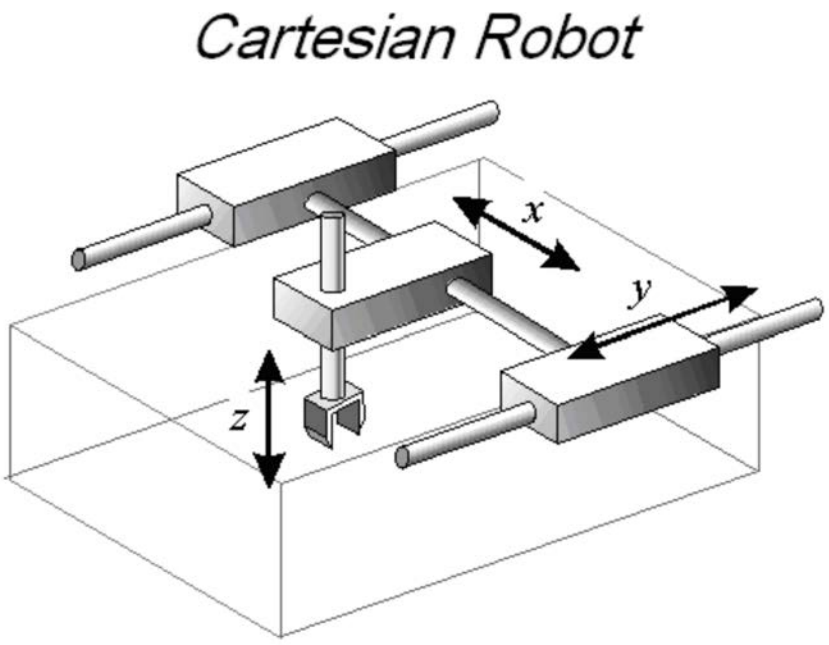


*Note. From "ROVer Ranch K-12 Experiments in Robotic Software" by NASA, 2003, Types of Robots. Retrieved November 17, 2008, from http://prime.jsc.nasa.gov/ROV/types.html*

Figure B-1 Cartesian Robot

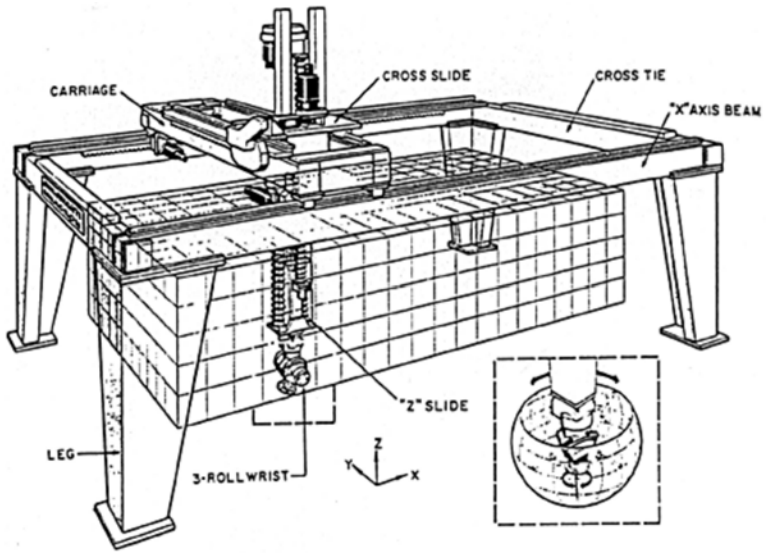


*Note. From "ROVer Ranch K-12 Experiments in Robotic Software" by NASA, 2003, Types of Robots. Retrieved November 17, 2008, from http://prime.jsc.nasa.gov/ROV/types.html*

Figure B-2 Cartesian Gantry Robot



Unofficial convenience copy of A-CR-CCP-804/PF-001, cached 2026-11-08 from https://app.cadets.gc.ca/cadet-publications/A-CR-CCP-804-PF-001/A-CR-CCP-804-PF-001.pdf.
Verify against the official publication.

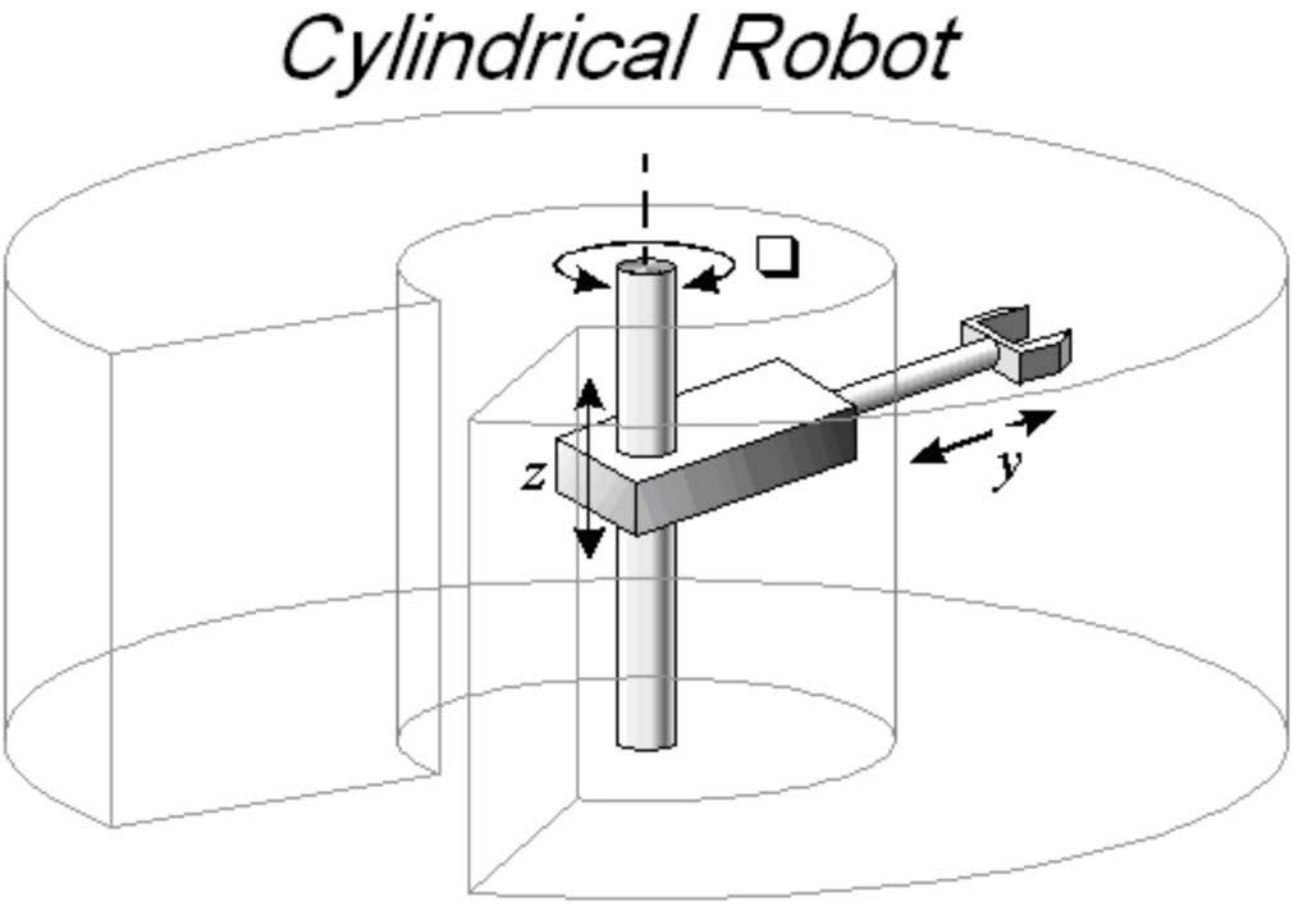


*Note. From "ROVer Ranch K-12 Experiments in Robotic Software" by NASA, 2003, Types of Robots. Retrieved November 17, 2008, from http://prime.jsc.nasa.gov/ROV/types.html*

Figure B-3 Cylindrical Robot



Unofficial convenience copy of A-CR-CCP-804/PF-001, cached 2026-11-08 from https://app.cadets.gc.ca/cadet-publications/A-CR-CCP-804-PF-001/A-CR-CCP-804-PF-001.pdf.
Verify against the official publication.

# Polar Robot

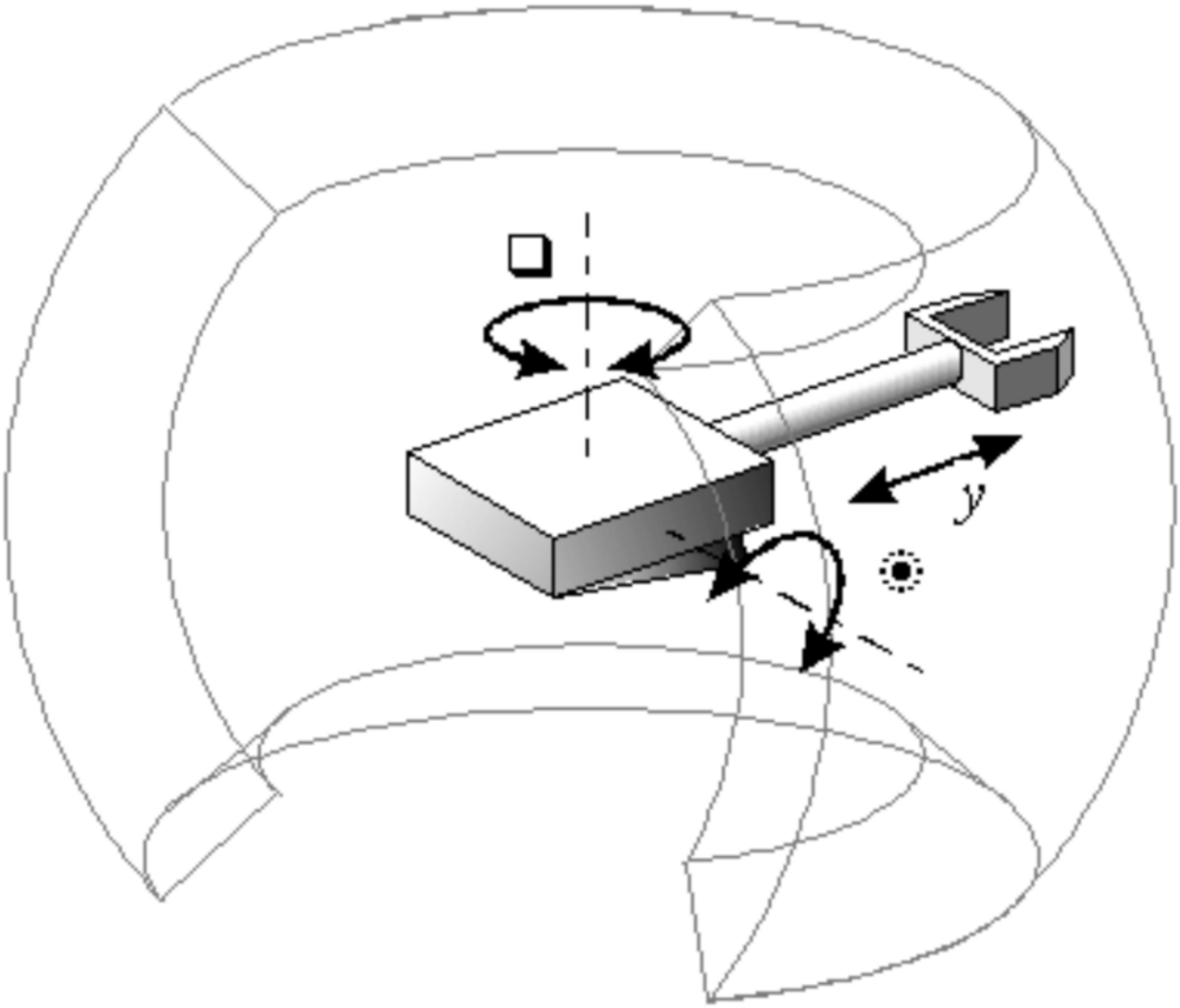


*Note. From "ROVer Ranch K-12 Experiments in Robotic Software" by NASA, 2003, Types of Robots. Retrieved November 17, 2008, from http://prime.jsc.nasa.gov/ROV/types.html*

Figure B-4 Polar Robot



Unofficial convenience copy of A-CR-CCP-804/PF-001, cached 2026-11-08 from https://app.cadets.gc.ca/cadet-publications/A-CR-CCP-804-PF-001/A-CR-CCP-804-PF-001.pdf.
Verify against the official publication.

# SCARA Robot

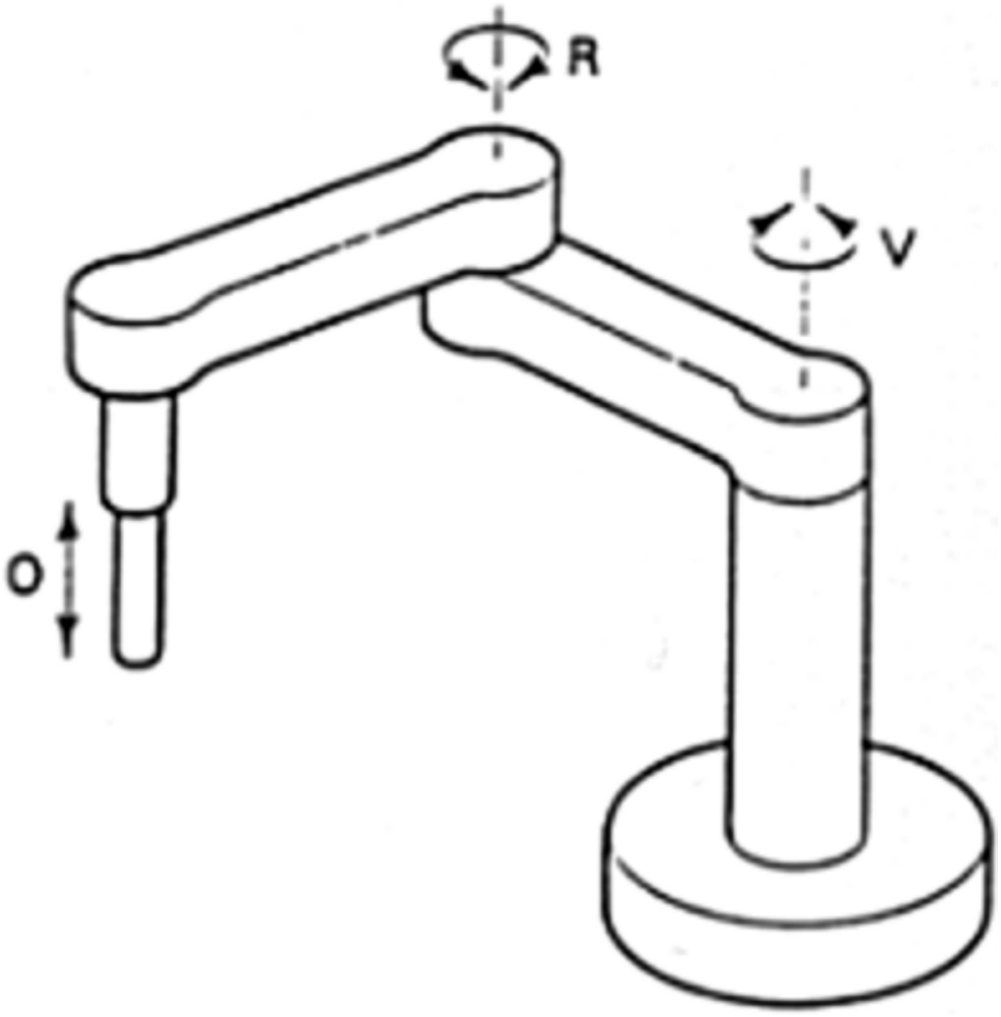


*Note. From "ROVer Ranch K-12 Experiments in Robotic Software" by NASA, 2003, Types of Robots. Retrieved November 17, 2008, from http://prime.jsc.nasa.gov/ROV/types.html*

Figure B-5 Selective Compliant Articulated Robot for Assembly (SCARA) Robot



Unofficial convenience copy of A-CR-CCP-804/PF-001, cached 2026-11-08 from https://app.cadets.gc.ca/cadet-publications/A-CR-CCP-804-PF-001/A-CR-CCP-804-PF-001.pdf.
Verify against the official publication.

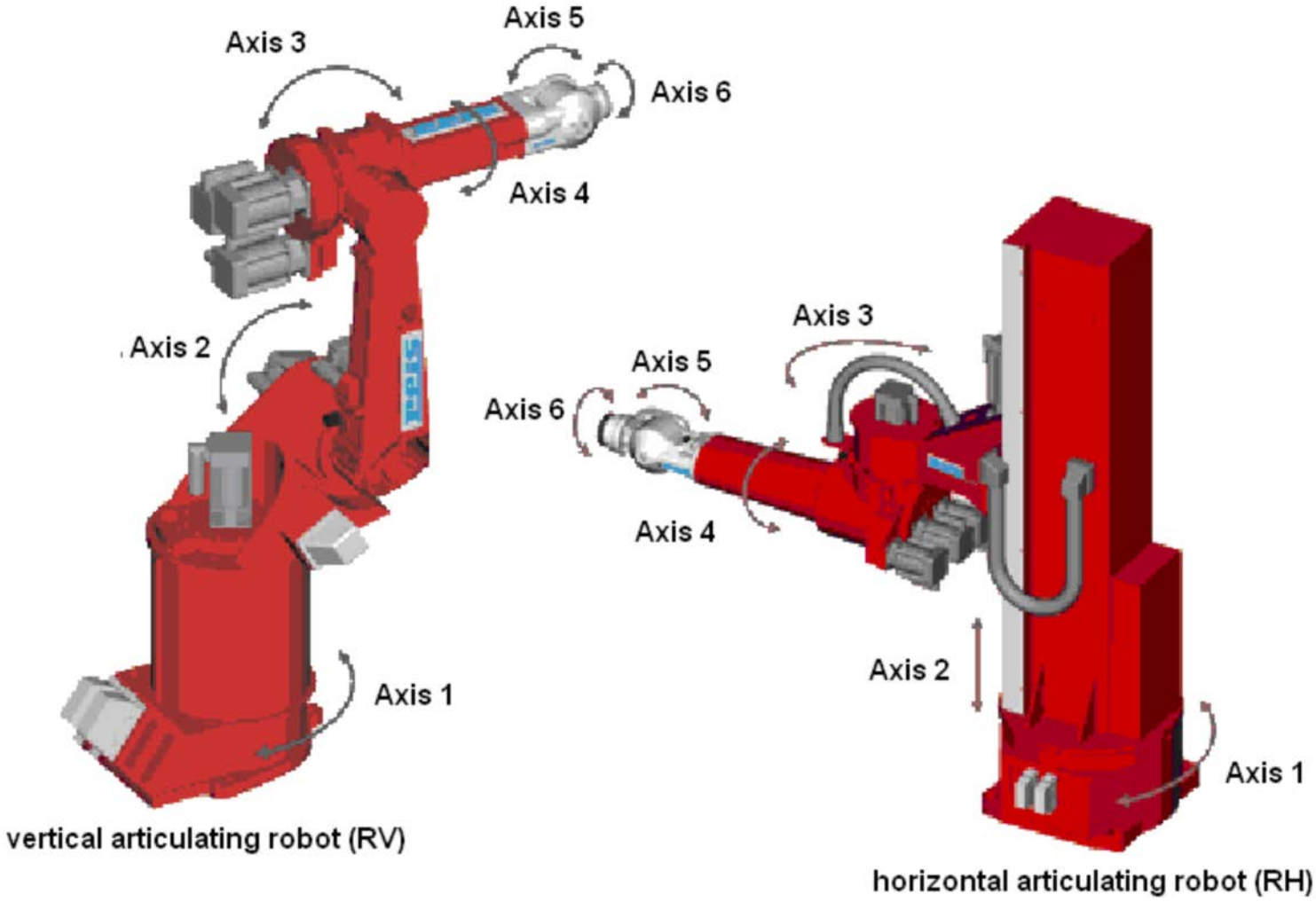


*Note. From "Robotics & Automation Home: Types of Robots" by Olympus Technologies Ltd., 2008, Articulating Robots. Retrieved November 22, 2008, from http://www.olympustechnologies.co.uk/Robotics/types-articulating.htm*

Figure B-6 Articulated Robots



Unofficial convenience copy of A-CR-CCP-804/PF-001, cached 2026-11-08 from https://app.cadets.gc.ca/cadet-publications/A-CR-CCP-804-PF-001/A-CR-CCP-804-PF-001.pdf. Verify against the official publication.

THIS PAGE INTENTIONALLY LEFT BLANK



Unofficial convenience copy of A-CR-CCP-804/PF-001, cached 2026-11-08 from https://app.cadets.gc.ca/cadet-publications/A-CR-CCP-804-PF-001/A-CR-CCP-804-PF-001.pdf. Verify against the official publication.

*Parallel Robot*

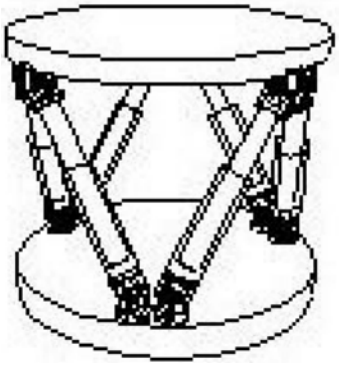

*Note. From "ROVer Ranch K-12 Experiments in Robotic Software" by NASA, 2003, Types of Robots. Retrieved November 17, 2008, from http://prime.jsc.nasa.gov/ROV/types.html*

Figure B-7 Parallel Robot

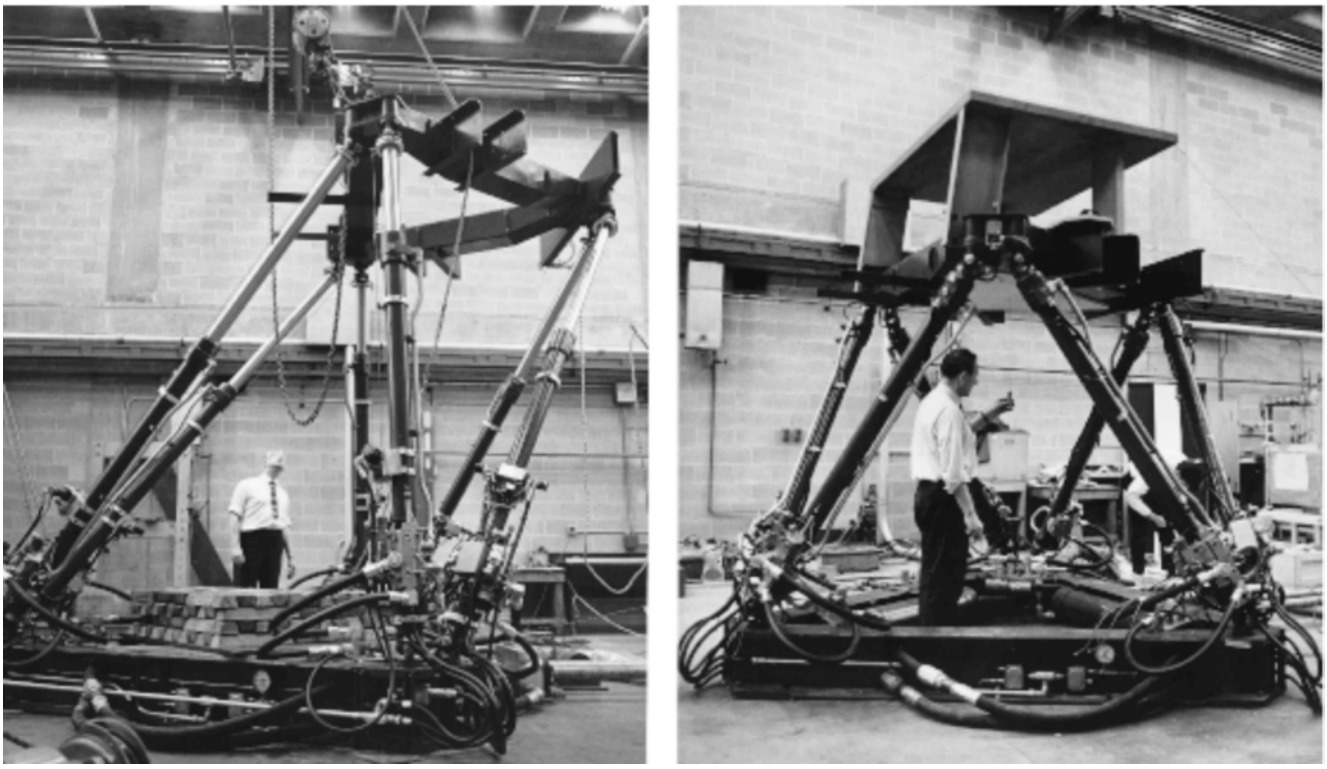

*Note. From "Reviews in the Field of Parallel Mechanisms", by ParalleMIC, 2003, Copyright 2003 by Ilian Bonev, The True Origins of Parallel Robots. Retrieved November 22, 2008, from http://www.olympustechnologies.co.uk/Robotics/types-articulating.htm*

Figure B-8 Parallel Robot: An Early Flight Simulator



Unofficial convenience copy of A-CR-CCP-804/PF-001, cached 2026-11-08 from https://app.cadets.gc.ca/cadet-publications/A-CR-CCP-804-PF-001/A-CR-CCP-804-PF-001.pdf.
Verify against the official publication.

THIS PAGE INTENTIONALLY LEFT BLANK



Unofficial convenience copy of A-CR-CCP-804/PF-001, cached 2026-11-08 from https://app.cadets.gc.ca/cadet-publications/A-CR-CCP-804-PF-001/A-CR-CCP-804-PF-001.pdf.
Verify against the official publication.



*Note. From "Robots That Make a Difference", by iRobot, 2008, Missions for Maritime Operations: Seaglider, Copyright 2007, by iRobot. Retrieved November 20, 2008, from http://www.irobot.com/sp.cfm?pageid=393*

Figure C-1 Seaglider



Unofficial convenience copy of A-CR-CCP-804/PF-001, cached 2026-11-08 from https://app.cadets.gc.ca/cadet-publications/A-CR-CCP-804-PF-001/A-CR-CCP-804-PF-001.pdf.
Verify against the official publication.

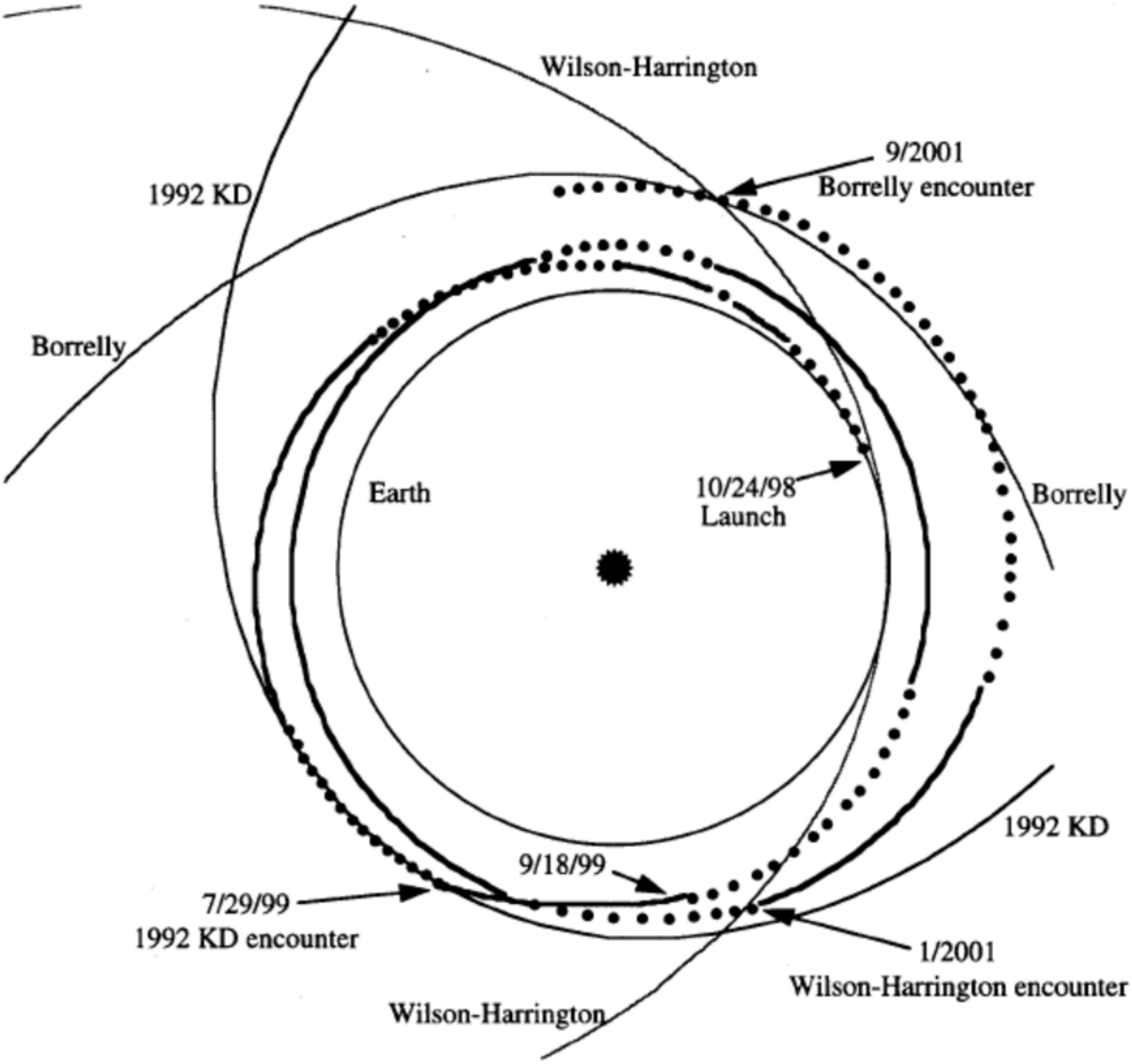


*Note. From Results From the Deep Space 1 Technology Validation Mission, by M. Rayman, P. Varghese, D. Lehman, and L. Livesay. Copyright 1999 by the American Institute of Aeronautics and Astronautics, Inc. Retrieved November 20, 2008, from http://nmp.jpl.nasa.gov/ds1/DS1_Primary_Mission.pdf*

Figure C-2 DS1 Trajectory



Unofficial convenience copy of A-CR-CCP-804/PF-001, cached 2026-11-08 from https://app.cadets.gc.ca/cadet-publications/A-CR-CCP-804-PF-001/A-CR-CCP-804-PF-001.pdf.
Verify against the official publication.

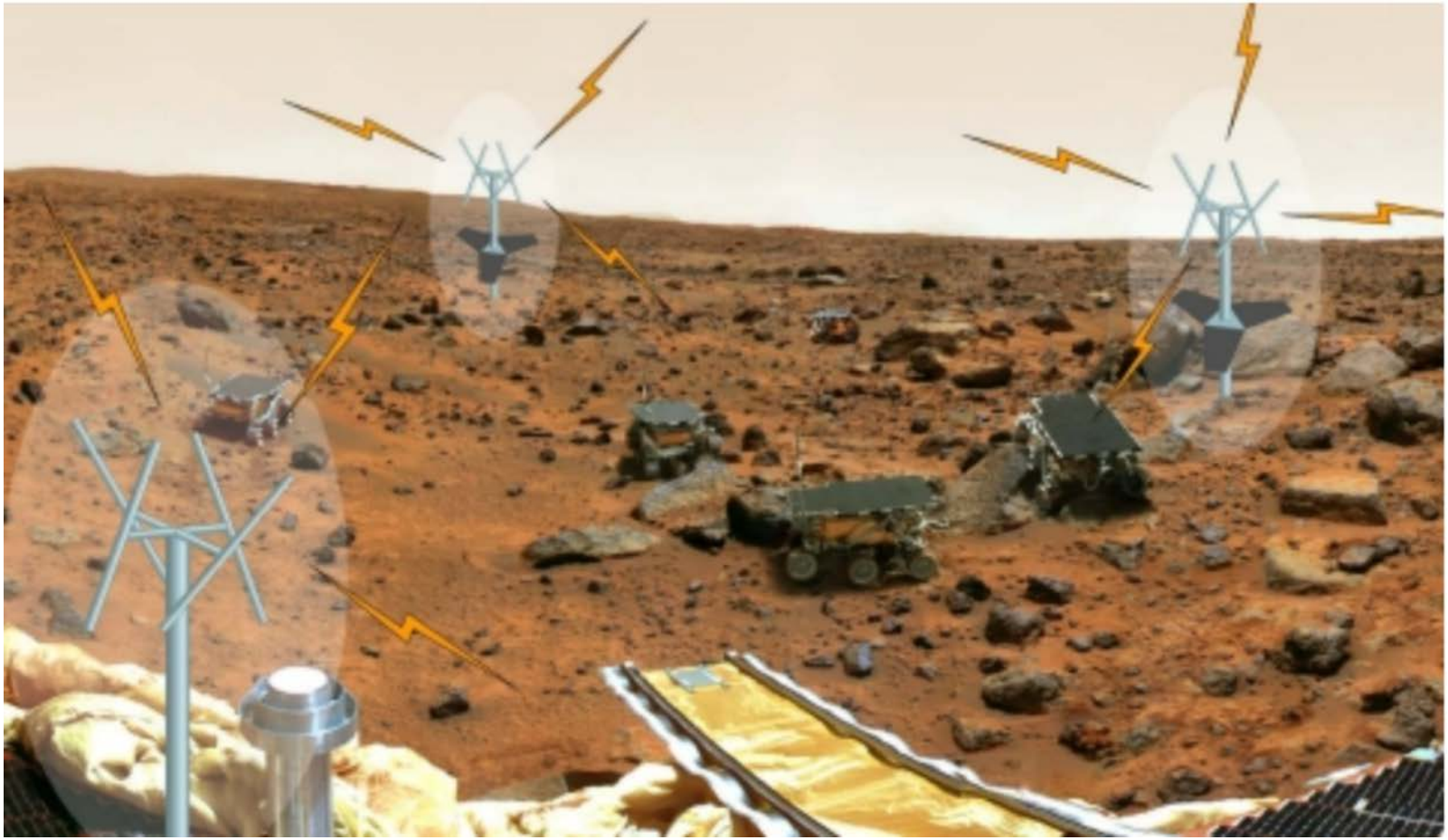

*Note. From "ARL Projects", by Stanford University Aerospace Robotics Laboratory, 2005, Mars Rover Navigation Using GPS Self-Calibrating Pseudolite Arrays. Retrieved November 20, 2008, from http://arl.stanford.edu/*

Figure C-3 Self-Calibrating Pseudolite Array



Unofficial convenience copy of A-CR-CCP-804/PF-001, cached 2026-11-08 from https://app.cadets.gc.ca/cadet-publications/A-CR-CCP-804-PF-001/A-CR-CCP-804-PF-001.pdf. Verify against the official publication.

THIS PAGE INTENTIONALLY LEFT BLANK



Unofficial convenience copy of A-CR-CCP-804/PF-001, cached 2026-11-08 from https://app.cadets.gc.ca/cadet-publications/A-CR-CCP-804-PF-001/A-CR-CCP-804-PF-001.pdf. Verify against the official publication.



*Note. From "Robots That Make a Difference", by iRobot, 2008, Missions for Ground Forces: Sniper Protection, Copyright 2007 by iRobot. Retrieved November 20, 2008, from http://www.irobot.com/sp.cfm?pageid=165*

Figure C-4 Sniper Detection



Unofficial convenience copy of A-CR-CCP-804/PF-001, cached 2026-11-08 from https://app.cadets.gc.ca/cadet-publications/A-CR-CCP-804-PF-001/A-CR-CCP-804-PF-001.pdf.
Verify against the official publication.

THIS PAGE INTENTIONALLY LEFT BLANK



Unofficial convenience copy of A-CR-CCP-804/PF-001, cached 2026-11-08 from https://app.cadets.gc.ca/cadet-publications/A-CR-CCP-804-PF-001/A-CR-CCP-804-PF-001.pdf.
Verify against the official publication.