ROYAL CANADIAN AIR CADETS

PROFICIENCY LEVEL FOUR

INSTRUCTIONAL GUIDE

SECTION 5

EO C432.02 – DESCRIBE TURBOCHARGING AND SUPERCHARGING SYSTEMS

Total Time: 30 min

PREPARATION

PRE-LESSON INSTRUCTIONS

Resources needed for the delivery of this lesson are listed in the lesson specification located in A-CR-CCP-804/PG-001, *Proficiency Level Four Qualification Standard and Plan*, Chapter 4. Specific uses for said resources are identified throughout the instructional guide within the TP for which they are required.

Review the lesson content and become familiar with the material prior to delivering the lesson.

Prepare slides located at Attachment A.

Photocopy the Turbocharging and Supercharging Worksheet located at Attachment B for each cadet.

PRE-LESSON ASSIGNMENT

Nil.

APPROACH

An interactive lecture was chosen for TPs 1 and 2 to clarify, emphasize, and summarize turbocharging and supercharging systems.

An in-class activity was chosen for TP 3 to confirm the cadets' comprehension of turbocharging and supercharging.

INTRODUCTION

REVIEW

Nil.

OBJECTIVES

By the end of this lesson the cadet shall have described turbocharging and supercharging systems.

IMPORTANCE

It is important for cadets to be able to describe turbocharging and supercharging systems as a solid understanding of turbocharging and supercharging systems provides knowledge for potential instructional duties and is part of the fundamentals that cadets pursuing future aviation training will require.

Unofficial convenience copy of A-CR-CCP-804/PF-001, cached 2026-11-08 from https://app.cadets.gc.ca/cadet-publications/A-CR-CCP-804-PF-001/A-CR-CCP-804-PF-001.pdf.
Verify against the official publication.

Teaching point 1 **Describe turbocharging.**

Time: 10 min Method: Interactive Lecture



Show slide of Figure A-1 to the cadets.

The capability of the engine to produce power decreases as altitude increases and the air becomes less dense. A turbocharger supplies dense air when the aircraft is operating in thin air at a high altitude using the engine power without using engine horsepower.



Show slide of Figure A-2 to the cadets.

Hot exhaust gases are discharged as waste energy and directed through a turbine wheel (impeller) at high rpm. The turbine wheel is mounted on a shaft paired with a centrifugal air compressor enclosed in separate housings. The compressor turns at the same speed as the turbine wheel. The air supplied by the compressor will be denser which enables the engine to produce more power.

The turbocharger is located between the air intake and the carburetor so the air is compressed before mixing with the fuel from the carburetor. The speed of the turbine depends on the difference in pressure between the exhaust gas and the outside pressure. The greater the difference, the less back pressure on the escaping gases and more speed by the turbine.

When flying at lower, denser altitudes, a waste gate in the exhaust system can remain open and the exhaust gas vents around the turbine into the atmosphere. Control of the turbocharger is provided by manual control, and automatic control.

Manual control. The simplest control system. It involves bleeding exhaust gas continuously through an opening of predetermined size allowing the remainder of the exhaust gas to turn the turbocharger. Engine power is adjusted by the throttle.

The more common manual control connects the throttle and the waste gate with the cockpit throttle control. A programmed movement of the throttle plate in the carburetor and the waste gate pair the opening and closing of the two systems. As the throttle plate moves toward full open, the waste gate closes.

Automatic control. A pressure controller senses the difference in air pressure and controls the position of the waste gate using pressurized oil.

The turbocharging system increases performance at altitude. It delivers full power at altitudes above the service ceiling of a normal engine.

Unofficial convenience copy of A-CR-CCP-804/PF-001, cached 2026-11-08 from https://app.cadets.gc.ca/cadet-publications/A-CR-CCP-804-PF-001/A-CR-CCP-804-PF-001.pdf.
Verify against the official publication.

CONFIRMATION OF TEACHING POINT 1

QUESTIONS:

Q1. What does a turbocharger supply?

Q2. On what does the speed of the turbine depend?

Q3. What does the pressure controller in an automatic control do when it senses a difference in air pressure?

ANTICIPATED ANSWERS:

A1. Dense air when the aircraft is operating in thin air at a high altitude.

A2. The difference in pressure between the exhaust gas and the outside pressure.

A3. It controls the position of the waste gate using pressurized oil.

Teaching point 2 **Describe supercharging systems.**

Time: 5 min Method: Interactive Lecture



Show slide of Figure A-3 to the cadets.

Supercharging works on the same general principles as turbocharging (eg, density). The supercharger is an internally driven compressor powered by the engine. A supercharger compresses the fuel / air mixture after it leaves the carburetor (forced induction). When forced induction is used to increase the power of an engine at low altitudes, it is called boost.

When forced induction is used at high altitude to adjust for the lower density of the air and maintain sea level power, it is called supercharging.



Turbocharging. Compressing the intake air using a turbine turned by the exhaust gases.

Supercharging. Compressing the intake air using a turbine turned by the engine / crankshaft power.

CONFIRMATION OF TEACHING POINT 2

QUESTIONS:

Q1. What powers the supercharger?

Q2. What is the name given when the supercharger compresses the fuel / air mixture after it leaves the carburetor?

Q3. What is supercharging?

Unofficial convenience copy of A-CR-CCP-804/PF-001, cached 2026-11-08 from https://app.cadets.gc.ca/cadet-publications/A-CR-CCP-804-PF-001/A-CR-CCP-804-PF-001.pdf.
Verify against the official publication.

ANTICIPATED ANSWERS:

A1. The engine powers the supercharger.

A2. Forced induction.

A3. Supercharging is the use of forced induction at high altitude to adjust for the lower density of the air and maintain sea level power.

Teaching point 3 **Conduct an in-class activity to confirm the cadets' comprehension of turbocharging and supercharging.**

Time: 10 min Method: In-Class Activity

OBJECTIVE

The objective of this activity is to have the cadets confirm their comprehension of turbocharging and supercharging.

RESOURCES

- Pen / pencil,
- Turbocharging and Supercharging Worksheet located at Attachment B, and
- Turbocharging and Supercharging Worksheet Answer Key located at Attachment C.

ACTIVITY LAYOUT

Nil.

ACTIVITY INSTRUCTIONS

1. Distribute a worksheet to each cadet.
2. Have the cadets complete the worksheet.
3. Review the answers using the answer key.

SAFETY

Nil.

CONFIRMATION OF TEACHING POINT 3

The cadets' participation in the activity will serve as the confirmation of this TP.

END OF LESSON CONFIRMATION

The cadets' completion of the Turbocharging and Supercharging Worksheet will serve as the confirmation of this lesson.

Unofficial convenience copy of A-CR-CCP-804/PF-001, cached 2026-11-08 from https://app.cadets.gc.ca/cadet-publications/A-CR-CCP-804-PF-001/A-CR-CCP-804-PF-001.pdf.
Verify against the official publication.

CONCLUSION

HOMEWORK / READING / PRACTICE

Nil.

METHOD OF EVALUATION

Nil.

CLOSING STATEMENT

Being able to describe turbocharging and supercharging systems is important for understanding more complex material. A solid understanding of turbocharging and supercharging systems is required to pursue future aviation training.

INSTRUCTOR NOTES / REMARKS

Cadets who are qualified Advanced Aviation may assist with this instruction.

REFERENCES

C3-116 ISBN 0-9680390-5-7 MacDonald, A. F., & Peppler, I. L. (2000). *From the ground up: Millennium edition*. Ottawa, ON: Aviation Publishers Co. Limited.

Unofficial convenience copy of A-CR-CCP-804/PF-001, cached 2026-11-08 from https://app.cadets.gc.ca/cadet-publications/A-CR-CCP-804-PF-001/A-CR-CCP-804-PF-001.pdf.
Verify against the official publication.

THIS PAGE INTENTIONALLY LEFT BLANK

Unofficial convenience copy of A-CR-CCP-804/PF-001, cached 2026-11-08 from https://app.cadets.gc.ca/cadet-publications/A-CR-CCP-804-PF-001/A-CR-CCP-804-PF-001.pdf.
Verify against the official publication.

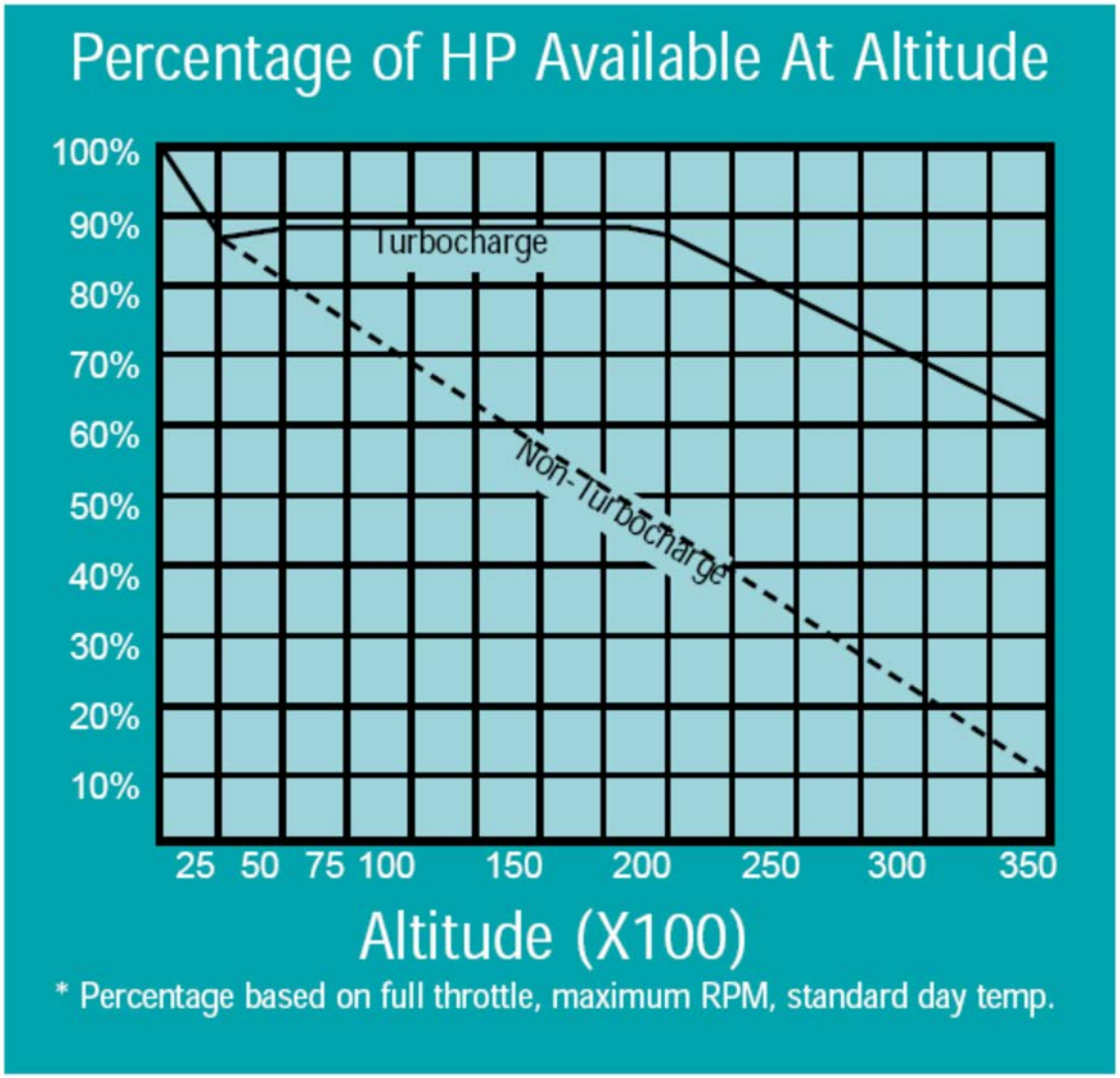

Note. From "Boosting Your Knowledge of Tubocharging", Kelly Aerospace. Retrieved March 17, 2009, from http://www.kellyaerospace.com/articles/Turbocharging.pdf

Figure A-1 Percentage of Horsepower Available at Altitude

Unofficial convenience copy of A-CR-CCP-804/PF-001, cached 2026-11-08 from https://app.cadets.gc.ca/cadet-publications/A-CR-CCP-804-PF-001/A-CR-CCP-804-PF-001.pdf.
Verify against the official publication.

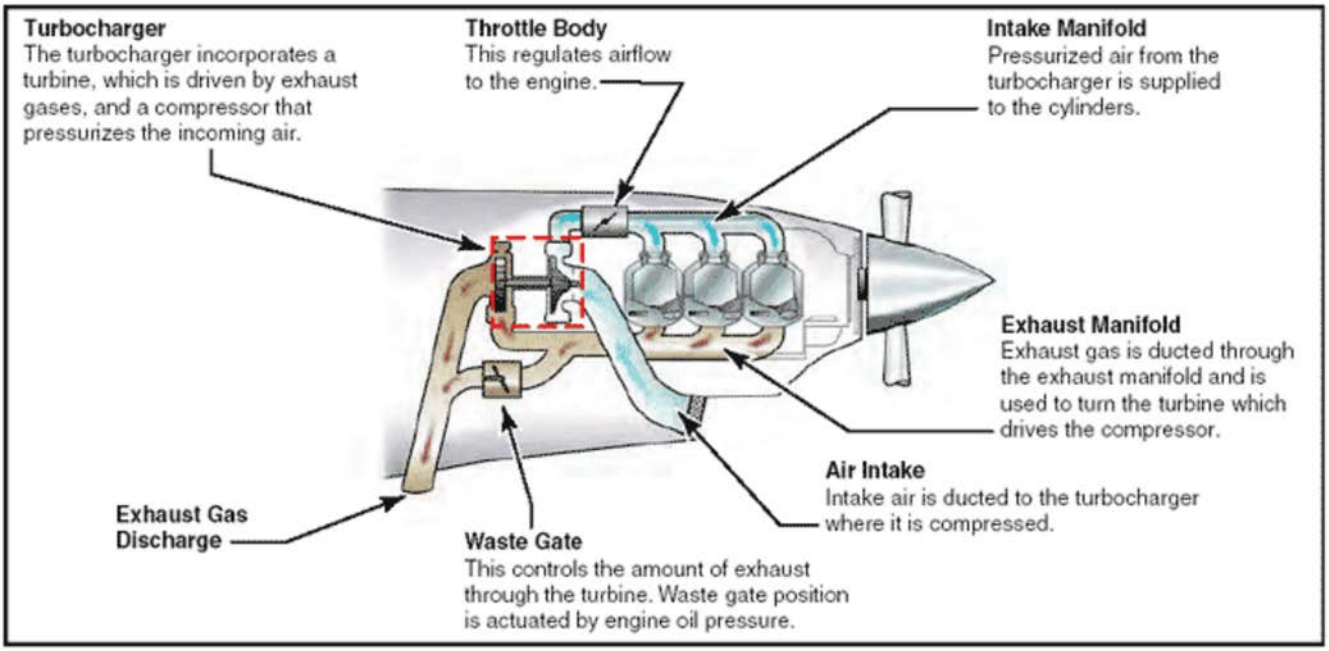

Note. From "Online Free Private Pilot Ground School", The Aircraft Powerplant. Retrieved March 17, 2009, from http://www.free-online-private-pilot-ground-school.com/aircraft-powerplant.html

Figure A-2 Turbocharger Components

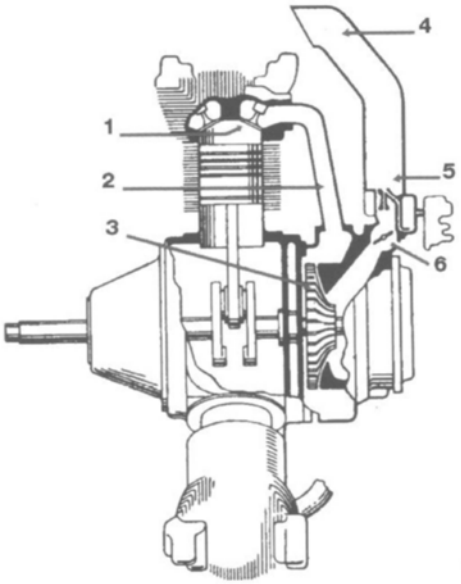

1. intake valve
2. intake manifold
3. supercharger
4. airscoop
5. carburetor
6. throttle

Note. From From the Ground Up: Millennium Edition (p. 56), by A. F. MacDonald and I. L. Pepper, 2000, Ottawa, ON: Aviation Publishers Co. Limited. Copyright 2000 by Aviation Publishers Co. Limited.

Figure A-3 Supercharger Components

Unofficial convenience copy of A-CR-CCP-804/PF-001, cached 2026-11-08 from https://app.cadets.gc.ca/cadet-publications/A-CR-CCP-804-PF-001/A-CR-CCP-804-PF-001.pdf.
Verify against the official publication.

TURBOCHARGING AND SUPERCHARGING WORKSHEET

1. Place the following labels in the correct location:
   a. exhaust manifold,
   b. air intake,
   c. waste gate,
   d. exhaust gas discharge,
   e. turbocharger,
   f. throttle body, and
   g. intake manifold.

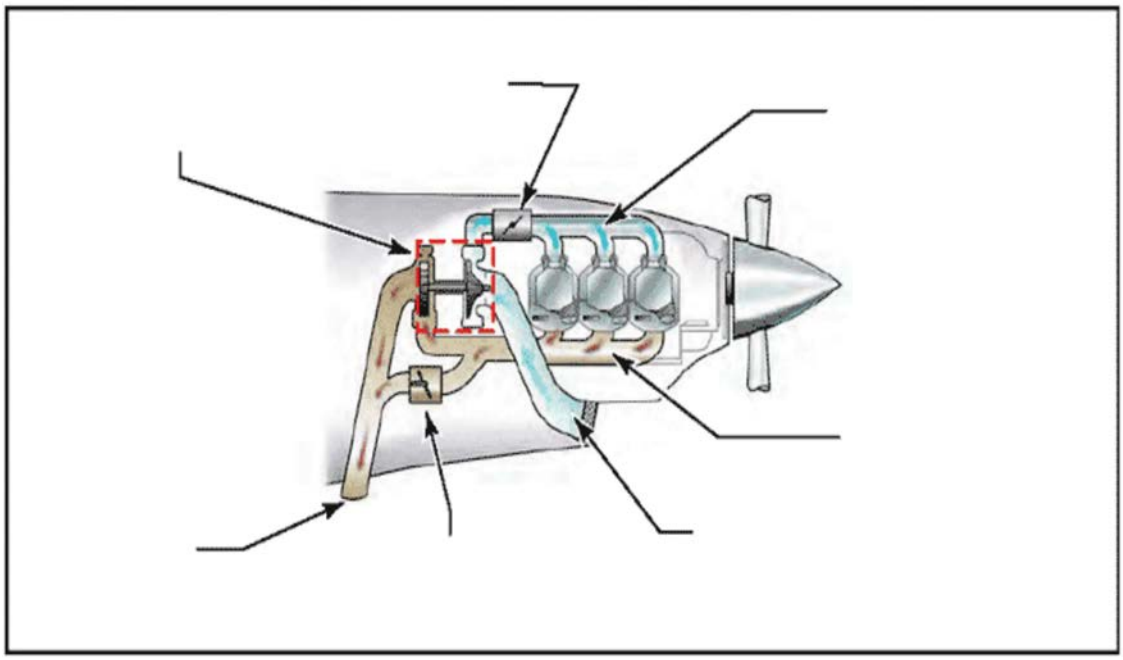

Note. From "Online Free Private Pilot Ground School", The Aircraft Powerplant. Retrieved March 17, 2009, from http://www.free-online-private-pilot-ground-school.com/aircraft-powerplant.html

Figure B-1 Turbocharger Components

2. Explain the key differences between turbocharging and supercharging.

Unofficial convenience copy of A-CR-CCP-804/PF-001, cached 2026-11-08 from https://app.cadets.gc.ca/cadet-publications/A-CR-CCP-804-PF-001/A-CR-CCP-804-PF-001.pdf.
Verify against the official publication.

3. Place the following labels in the correct location:

   a. supercharger,

   b. intake manifold,

   c. airscoop,

   d. intake valve,

   e. carburetor, and

   f. throttle.

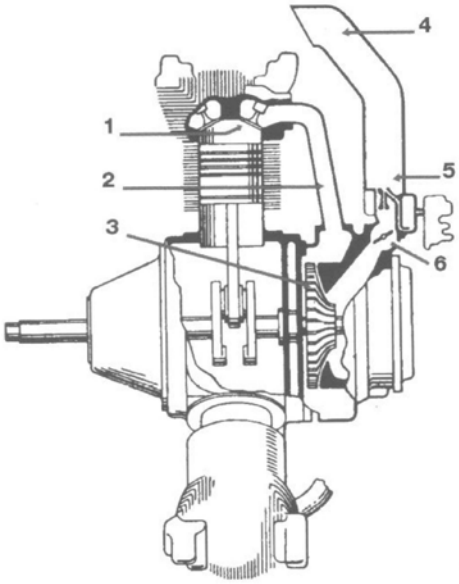

1. _____

2. _____

3. _____

4. _____

5. _____

6. _____

Note. From From the Ground Up: Millennium Edition (p. 56), by A. F. MacDonald and I. L. Pepper, 2000, Ottawa, ON: Aviation Publishers Co. Limited. Copyright 2000 by Aviation Publishers Co. Limited.

Figure B-2 Supercharger Components

Unofficial convenience copy of A-CR-CCP-804/PF-001, cached 2026-11-08 from https://app.cadets.gc.ca/cadet-publications/A-CR-CCP-804-PF-001/A-CR-CCP-804-PF-001.pdf.
Verify against the official publication.

TURBOCHARGING AND SUPERCHARGING WORKSHEET ANSWER KEY

1. Place the following labels in the correct location:
   a. exhaust manifold,
   b. air intake,
   c. waste gate,
   d. exhaust gas discharge,
   e. turbocharger,
   f. throttle body, and
   g. intake manifold.

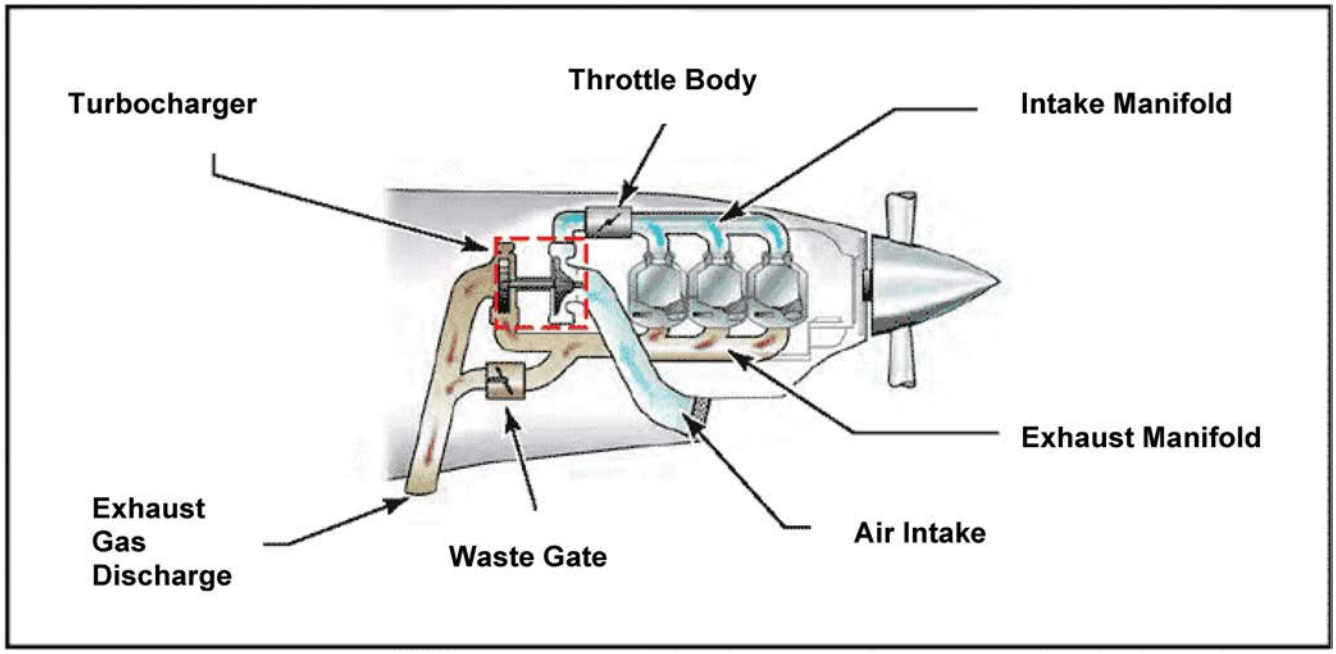

Note. From "Online Free Private Pilot Ground School", The Aircraft Powerplant. Retrieved March 17, 2009, from http://www.free-online-private-pilot-ground-school.com/aircraft-powerplant.html

Figure C-1 Turbocharger Components

2. Explain the key differences between turbocharging and supercharging.

A turbocharger compresses the intake air using a turbine turned by the exhaust gases.

A supercharger compresses the intake air using a turbine turned by the engine / crankshaft power.

Unofficial convenience copy of A-CR-CCP-804/PF-001, cached 2026-11-08 from https://app.cadets.gc.ca/cadet-publications/A-CR-CCP-804-PF-001/A-CR-CCP-804-PF-001.pdf.
Verify against the official publication.

3. Place the following labels in the correct location:

   a. supercharger,

   b. intake manifold,

   c. airscoop,

   d. intake valve,

   e. carburetor, and

   f. throttle.

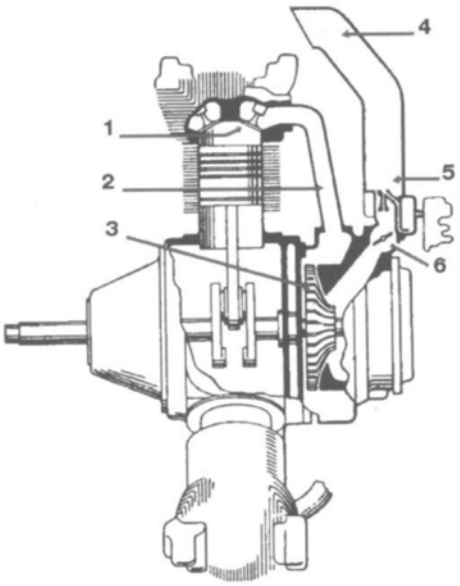

1. **intake valve**
2. **intake manifold**
3. **supercharger**
4. **airscoop**
5. **carburetor**
6. **throttle**

Note. From From the Ground Up: Millennium Edition (p. 56), by A. F. MacDonald and I. L. Pepper, 2000, Ottawa, ON: Aviation Publishers Co. Limited. Copyright 2000 by Aviation Publishers Co. Limited.

Figure C-2 Supercharger Components

Unofficial convenience copy of A-CR-CCP-804/PF-001, cached 2026-11-08 from https://app.cadets.gc.ca/cadet-publications/A-CR-CCP-804-PF-001/A-CR-CCP-804-PF-001.pdf.
Verify against the official publication.